NPS MDP Study
Outbrief Schedule, 1 JUN 2005

0800-0815 Introductions

0815-0915 Background/Results

0930-1015 Cargo Inspection System (Land)

1030-1130 Cargo Inspection System (Sea)

1130-1230 LUNCH

1230-1330 Sensor System

1345-1445 C3I System

1500-1600 Response Force System

NPS MDP Study
Land Inspection Group

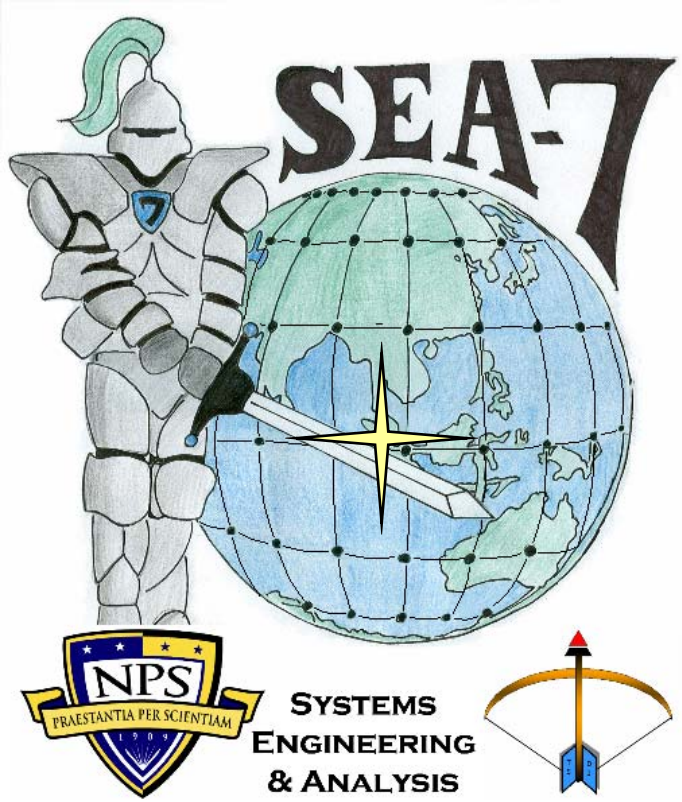

LT William Westmoreland, USN

MDP System
Operational Architecture

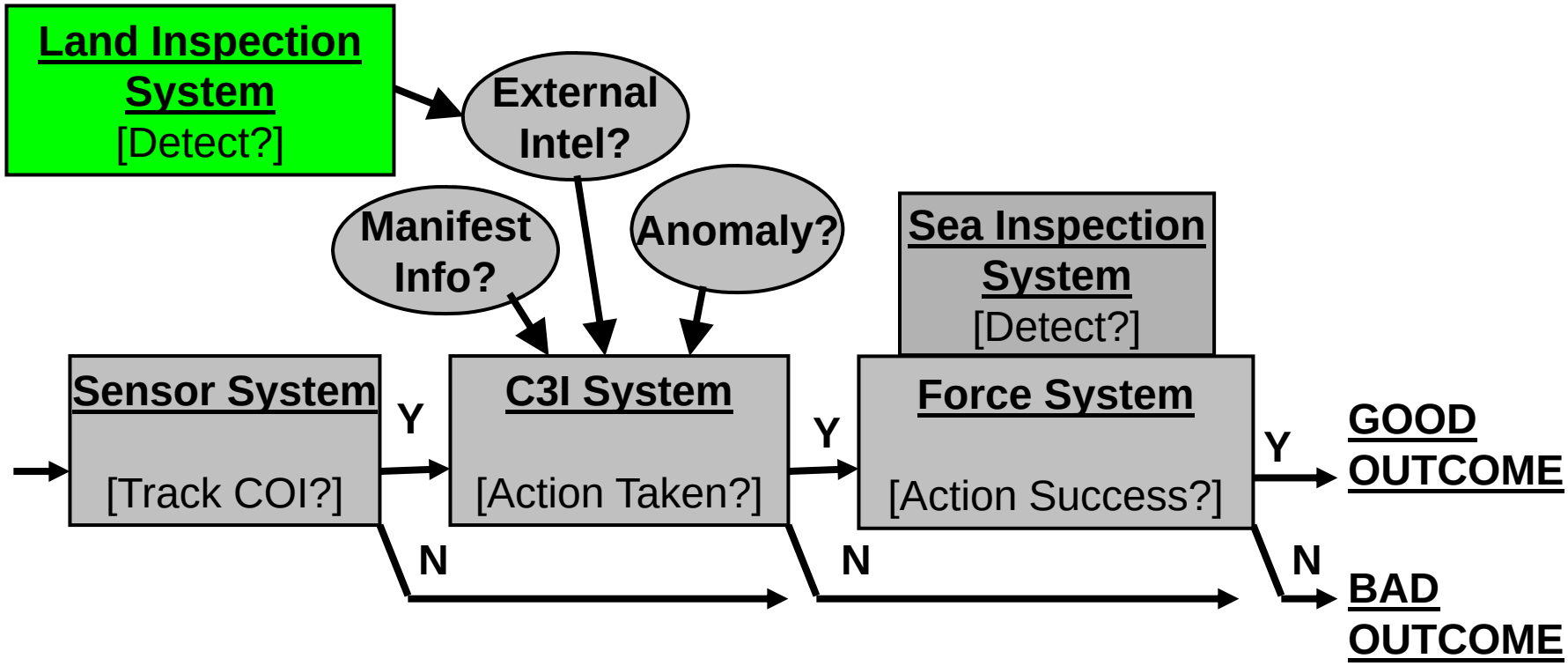

Land Inspection Agenda

- System Insights
- Objectives/Requirements
- Functional Decomposition
- Alternatives Generation
- Model Overview
- Model Assumptions and Factors
- Results
- Conclusions/Insights

NPS MDP Study System Insights

Land Cargo Inspection

- Effective Cargo Inspection requires industry cooperation

Sea Cargo Inspection

- Enroute at-sea Cargo Inspections can be effective using current handheld sensor technology

Land System Group Objectives

- Characterize cargo security and inspection process
- Identify methods to improve container security and inspection efficiency
- Develop model for land inspection system
- Determine driving factors for land inspection system
- Recommend system alternatives to improve land inspection performance

Land System Requirements

- Implement within five years
- Maximize detection of hazardous materials (CBRNE)
- Minimize delay
- Screen, target, and inspect cargo containers
- Provide information about containers, shippers, and carriers

Land System Objectives

- Increase the number of containers inspected
- Communicate results
- Dedicated resources for analysis of sensor data
- Improve intermodal security of containers
- Flexible

Functional Decomposition

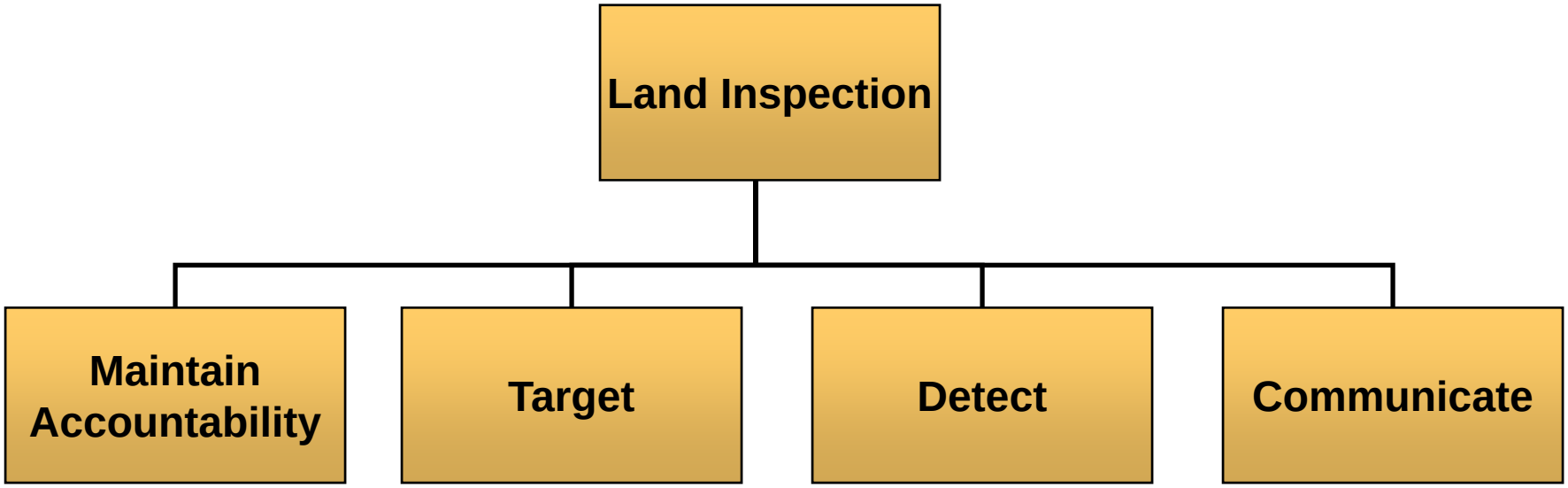

Port of Singapore “As-Is”

- Container Security Initiative participant
- Five container terminals – Mostly “Hub” transfer traffic
- Utilizes Free Trade Zones (FTZ)
- Only 1.4 % of containers inspected
- Limited chemical/biological detection capability
- Use x-ray & gamma ray imagers, radiological detection pagers, and canines

Land Inspection "As-Is"

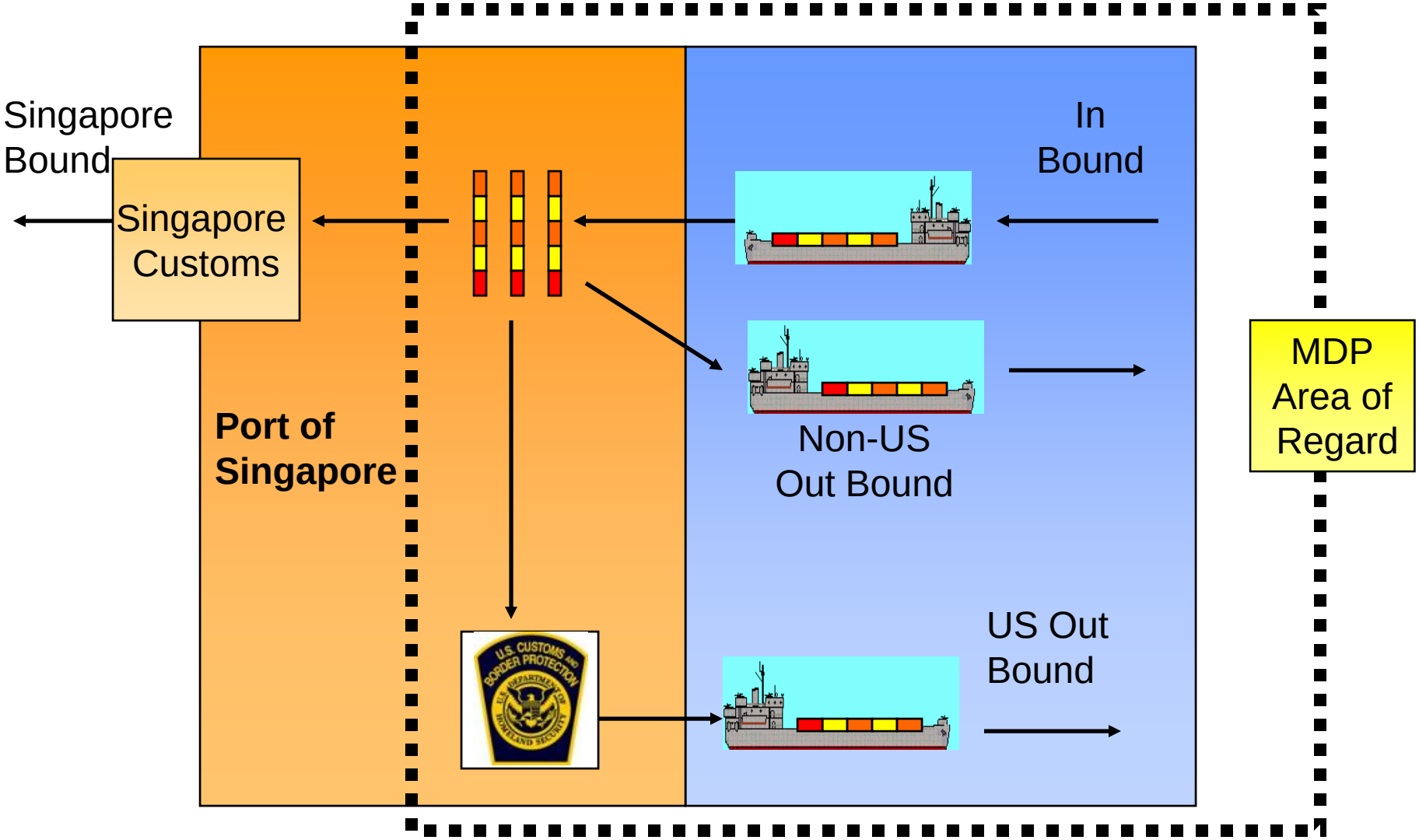

Land System Alternatives Generation

TARGET	
Container History	Verification Method
Origin	Human Intelligence
Route	Surveillance System

DETECT			
Nuclear/Radiation	Chem./Bio.	Explosives	Foreign Objects
Gamma-Ray Imager	Optical	Flash Chromatography	X-Ray Machine
High Purity Germanium	Arrays	Vapor Detector	Density Imager
Scintillation Counter	Flame Emission Photo		
Neutron Generator	Photo Ionization		
	trometer		
	nsitive		
	stic Wave		
	Spectrome		
	try		

COMMUNICATE	
Receive/Transmit	Record/Display
Infrared	Computer Database
Radio (UHF, etc.)	Voice/Video Recorder
Encoded Laser	Monitors
Cable/Fiber	Audio/Visual Alarms
Satellite Communications	
Cell Phones	
Internet	
Verbal/Visual	

MAINTAIN ACCOUNTABILITY	
Track	
Automated	Interpretation
Sensor Mapping	Human Search
Data Analysis	Imaging Display
Smart Container	Intelligence
RFID	Sickness Locality
Temper Resist Seal	

Land System Alternatives Overview

As-Is System

- **Implement CSI concept**

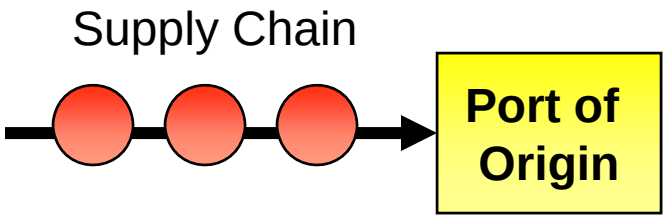

ALT 1: "Port-Centric"

- **Inspections occur in ports**
- **Intelligence limited**

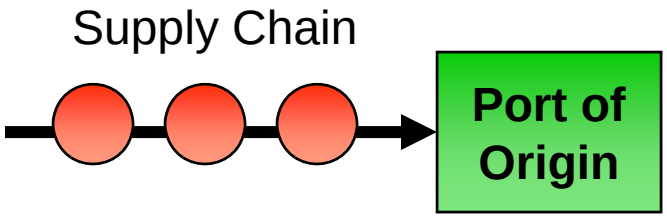

ALT 2: "Trusted Agent"

- **Enhanced security measures**
- **Heavy reliance on intelligence**

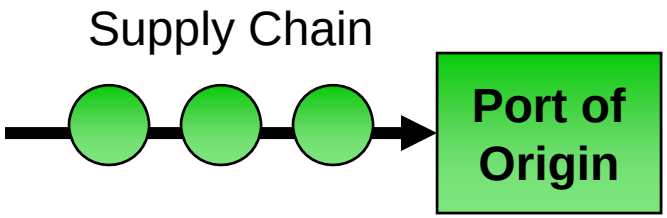

ALT 1 -Port Centric Inspection

- Layered security integrating passive/active sensors
- Inspections occur during normal container operations
- Intelligence limited
- Port-centric security

ALT-1 Port-centric Inspection

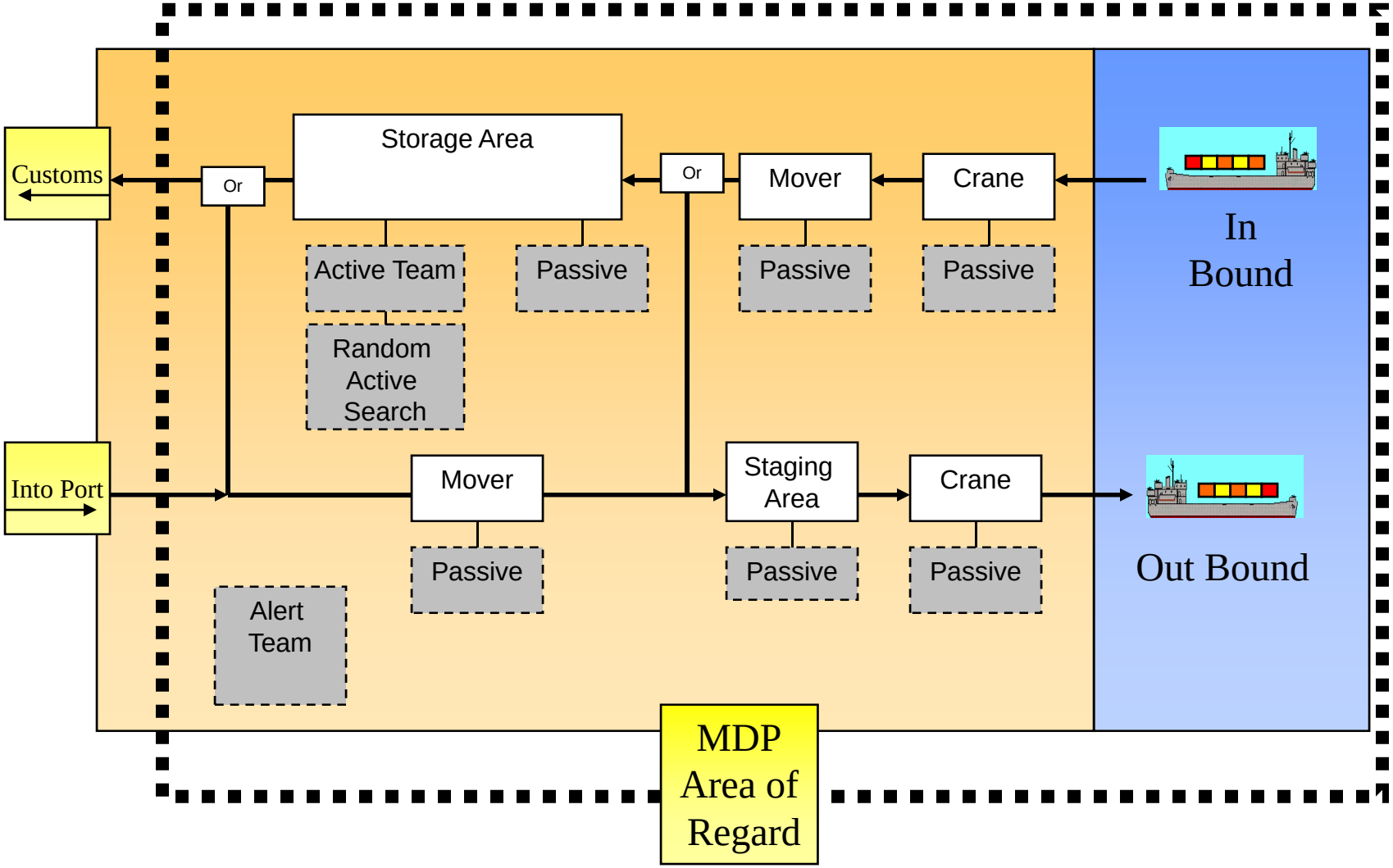

ALT 2 – Trusted Agent

- Layered security integrating passive/active sensors
- Inspections occur during normal container operations
- Targeting or selection of searched containers based on:
  - Container seals
  - Manifest Discrepancies
  - Certified Shippers
  - 2-3% randomly inspected
- Hybrid of port-centric inspection and supply chain security

Trusted Agent

- Procedural Security
- Physical Security
- Personnel Security
- Education and Training
- Access Controls
- Manifest Procedures
- Transportation Security

SENSORS CONSIDERED

1.Gas Chromatography / Ion Mobility Spectrometer

2. Radiation Pager

3. X-Ray Detector

4.Gamma-Ray Detector

5.Pulsed Fast Neutron Analyzer

6.High Purity Germanium Detector

7.Flow Cytometry

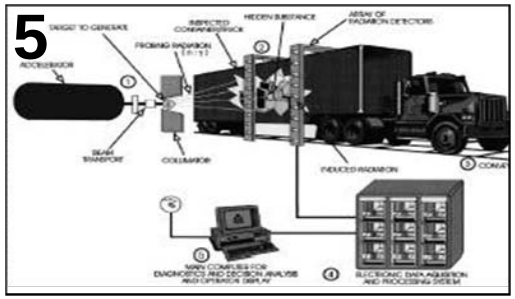

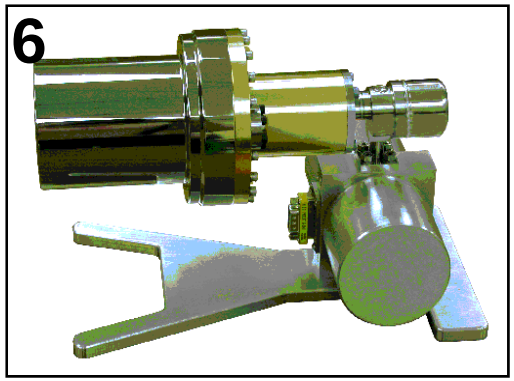

Overarching Modeling Plan

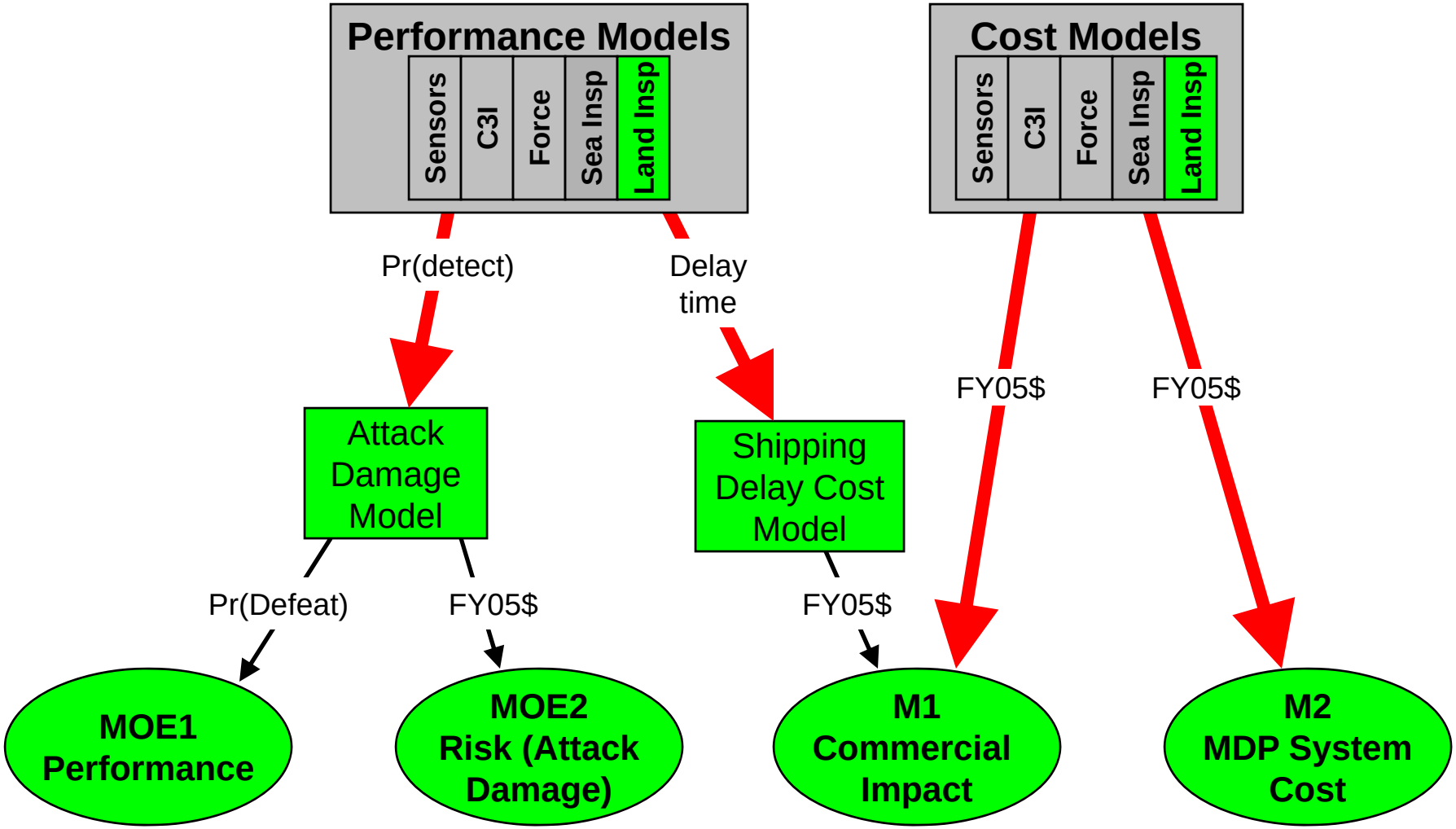

Model Overview

- **Approach**
  - Performance and Delay Cost
- **Models Used**
  - EXTEND v6 Model
  - Excel

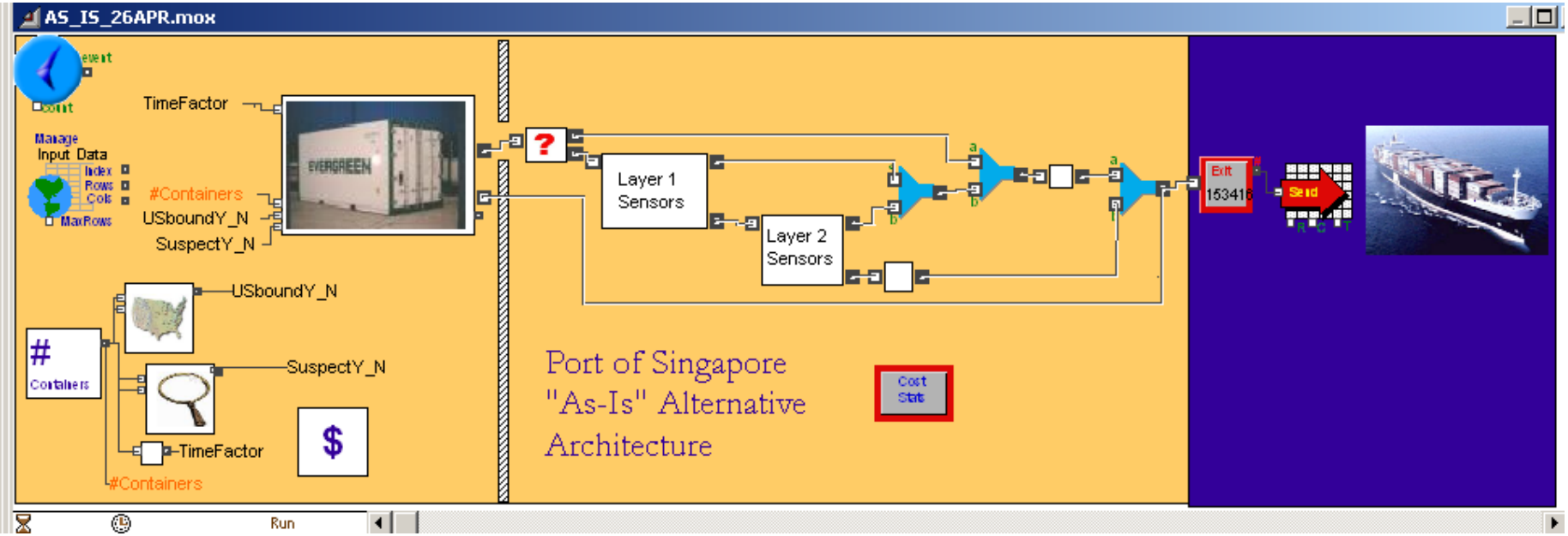

Land System Model Assumptions

- Based on Port of Singapore:
  - 2004 Port operations procedures.
  - 2004 port statistics.
  - Percentage of containers sent to temporary storage
  - Average container value of $25 K
  - Inspection times based on port operations

Land Inspection Factors

- Number of inspection teams
- Number of sensors
- Percentage inspected randomly
- P(d) & P(fa) for sensors
- Container throughput per month
- Inspection time per sensor
- Number of cranes and movers
- Percentage of containers in storage
- Days in storage
- Probability of given threat
- Container value
- Number of ports

** Varied factors in red

Land Performance Model Overview

Input Variables

- Number of Sensors
- Sensor Pd
- Number of Containers
- % Random Inspected
- Number of Active Teams

→ **Land Inspection Model** →

Outputs

- P(Detection)
- Delay Time
- Commercial Cost
- System Cost

Land System Model Results

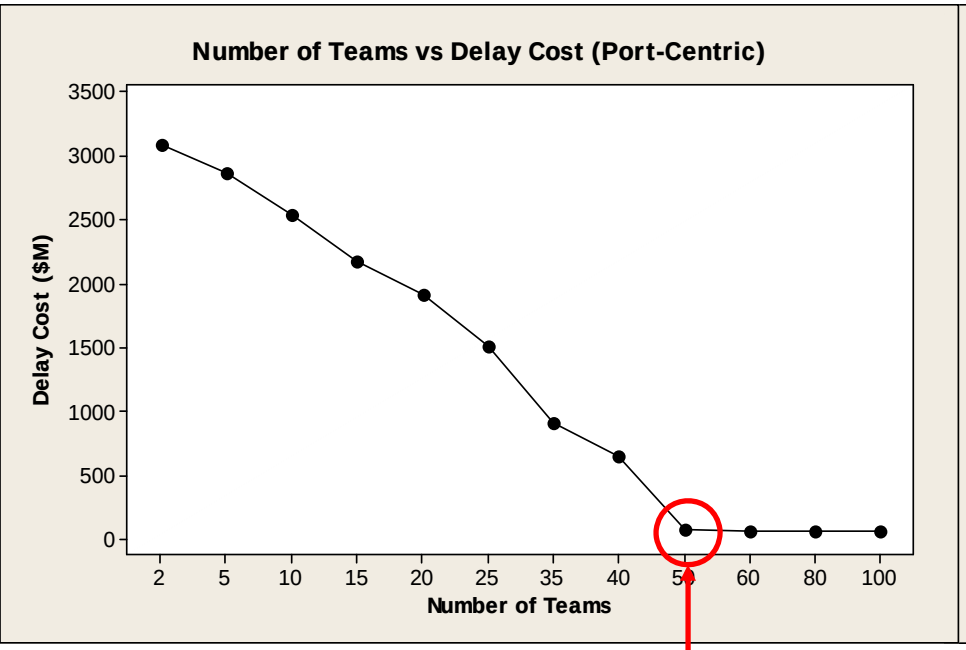

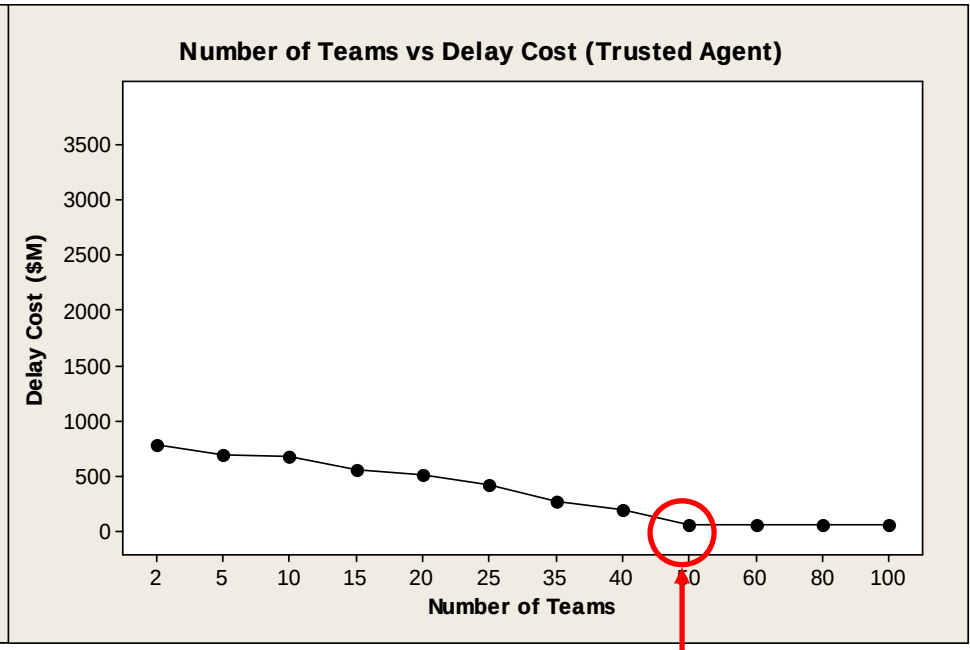

50 teams minimize delay cost

Land System Inspection Results

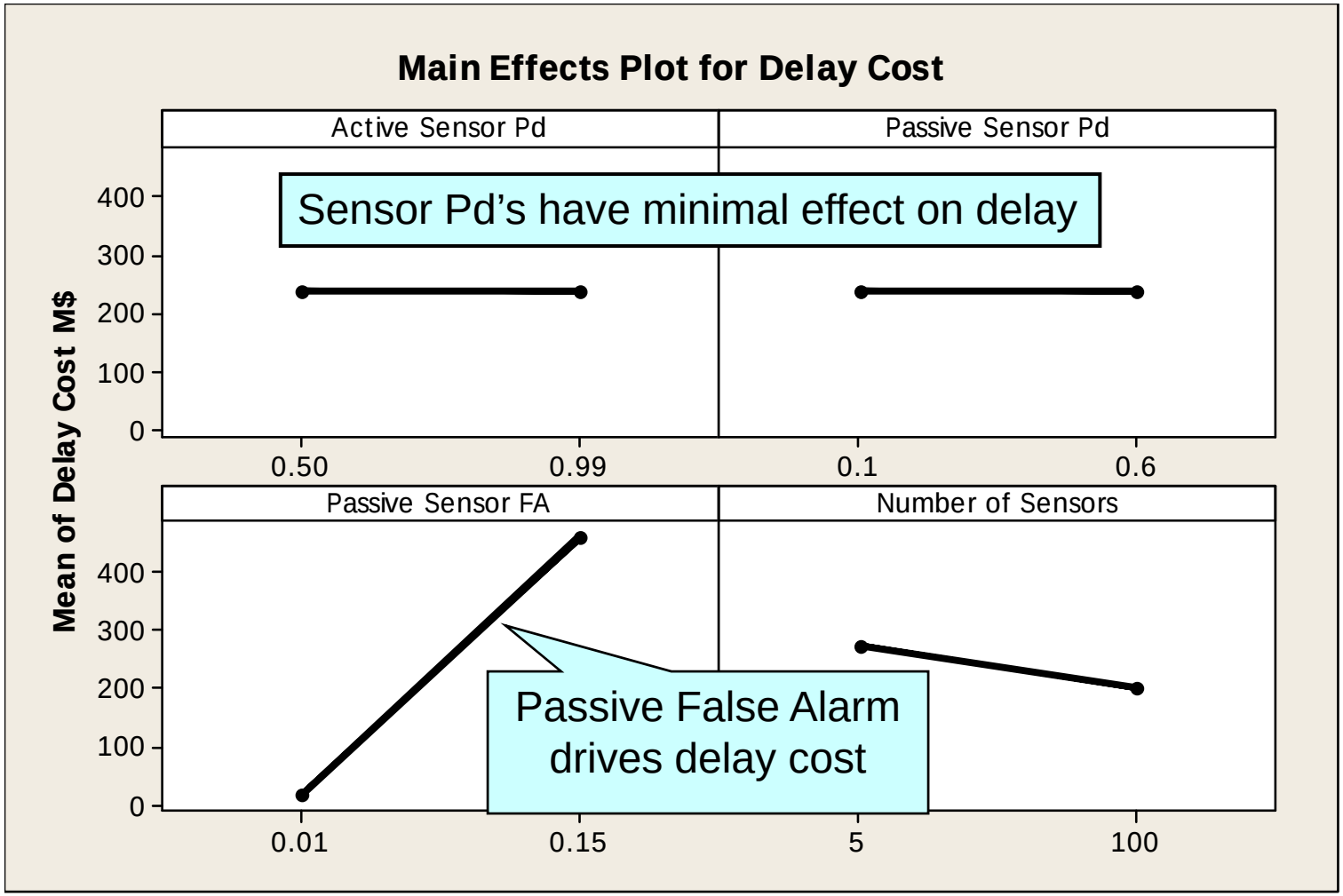

Land System Inspection Results

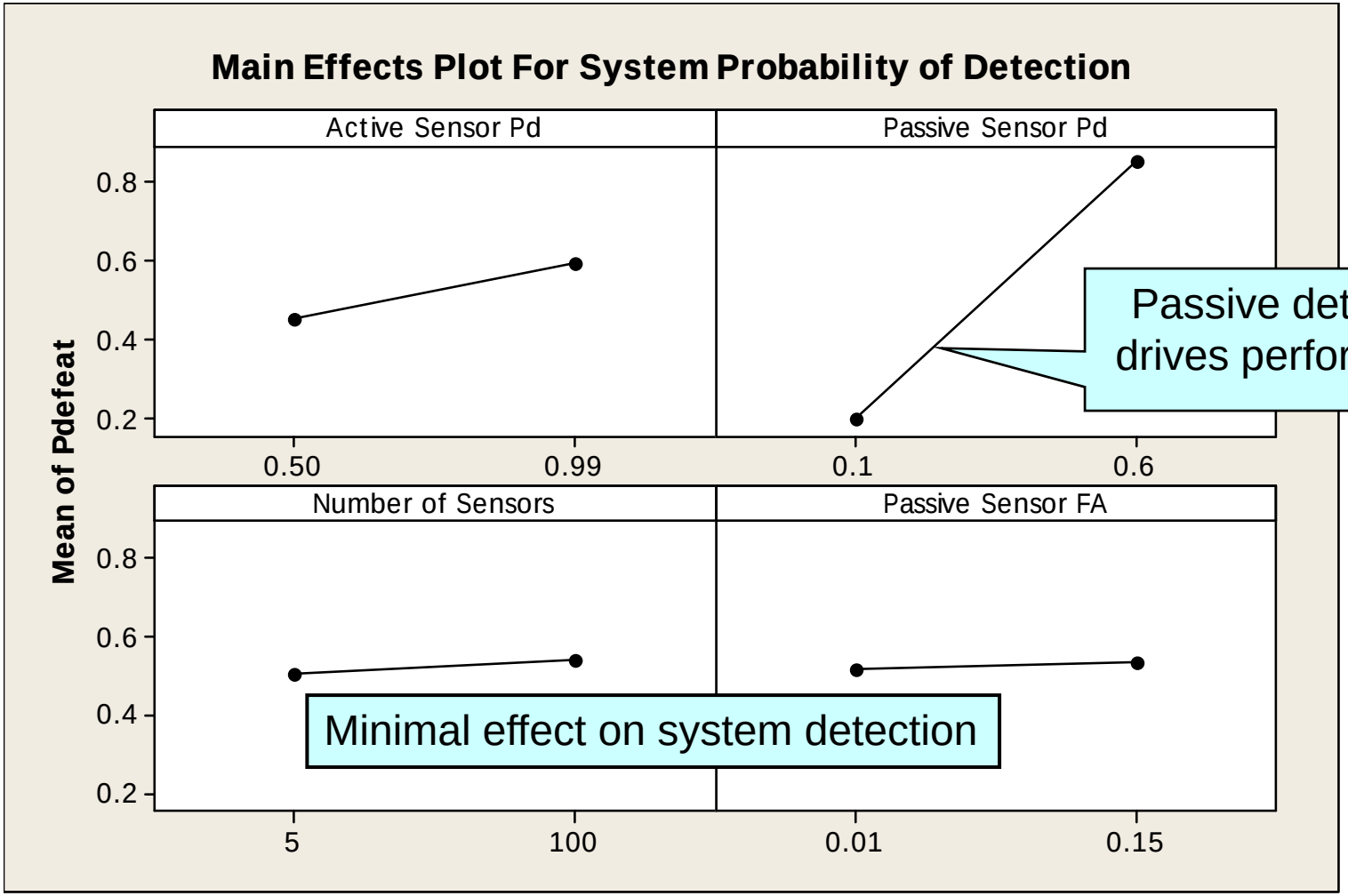

Passive detection drives performance

Minimal effect on system detection

Land Inspection System Variable Values

		Values		
Factors	Values Evaluated	As-Is	Alt 1	Alt 2
Number of Sensors	2-100	5	50	50
Active P(detection)	.3, .4, .5, .6, .85, .99	0.99	0.85	0.85
Active P(false alarm)	0.01	0.01	0.01	0.01
Passive P(detection)	.1, .6	0	0.6	0.6
Passive P(false alarm)	.01, .15	0	0.01	0.01

Land System Single Port Use Case: Port of Singapore

Land System Results
Single Port*

MOE / Metric	**'As-Is'**	**ALT 1**	**ALT 2**
Percent Cargo Inspected	6%	99%	99%
P(Detect I Inspect)	99%	87%	93%
P(Detect)	6%	87%	93%
Comm. Delay Cost ($M)	~0	1,921	1,688
Comm. Cost ($M)	0	0	1,753
Land System Cost ($M)	38	1,143	1,150
Total System Cost ($M)	38	3,064	4,591

* Modeled after the Port of Singapore

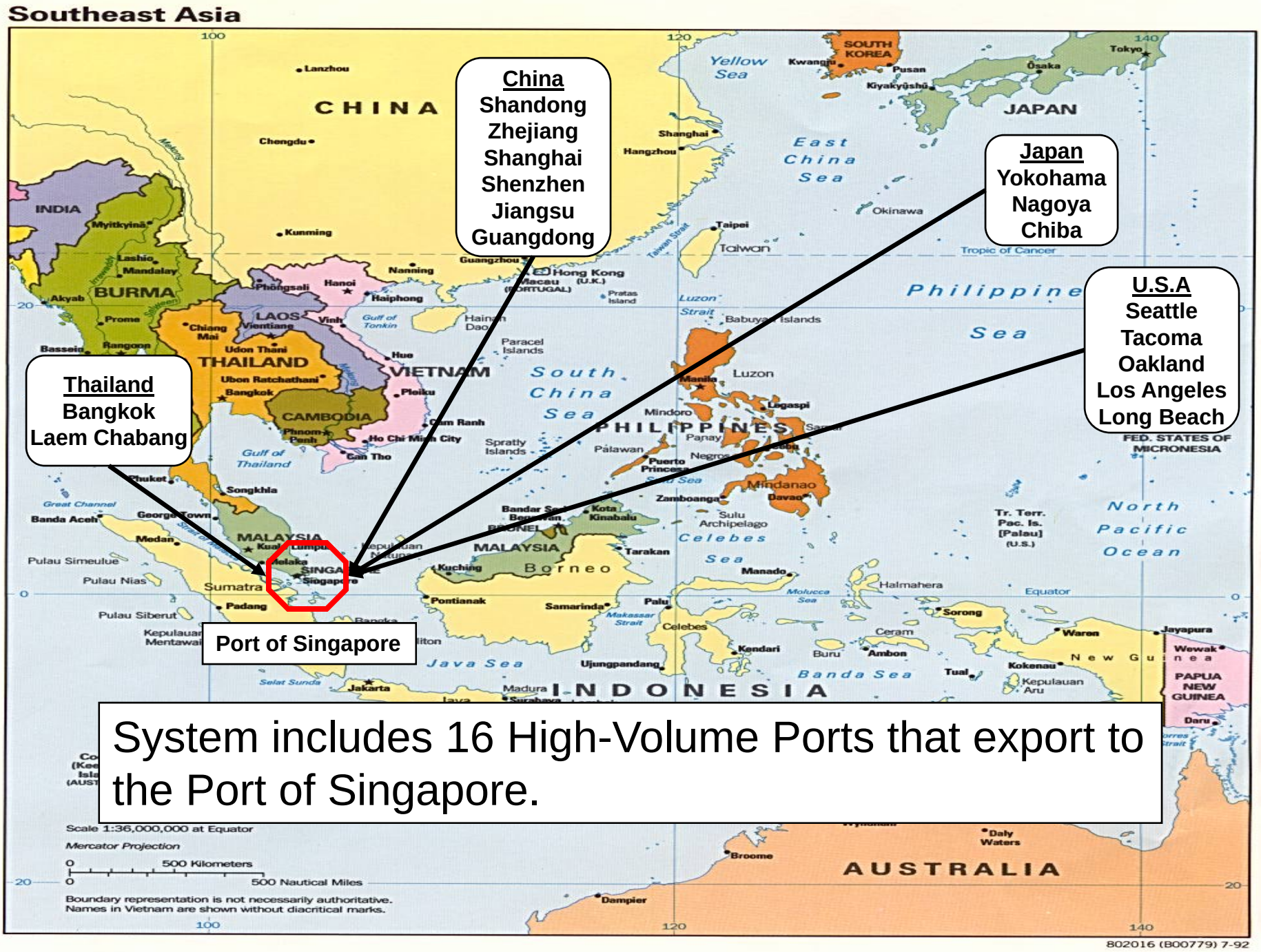

System includes 16 High-Volume Ports that export to the Port of Singapore.

Land System Results:

Inspections in 16 Highest-Volume Ports-of-Origin

MOE / Metric	**'As-Is'**	**ALT 1**	**ALT 2**
% Inbound Cargo Inspected	2%	47%	74%
P(Detect I Inspect)	99%	88%	94%
P(Detect) all inbound cargo	2%	41%	56%
Comm. Delay Cost ($M)	~0	30,730	27,019
Comm. Cost ($M)	0	0	1,753
Land System Cost ($M)	608	36,677	33,841
Total System Cost ($M)	608	67,407	62,613

Overall Results

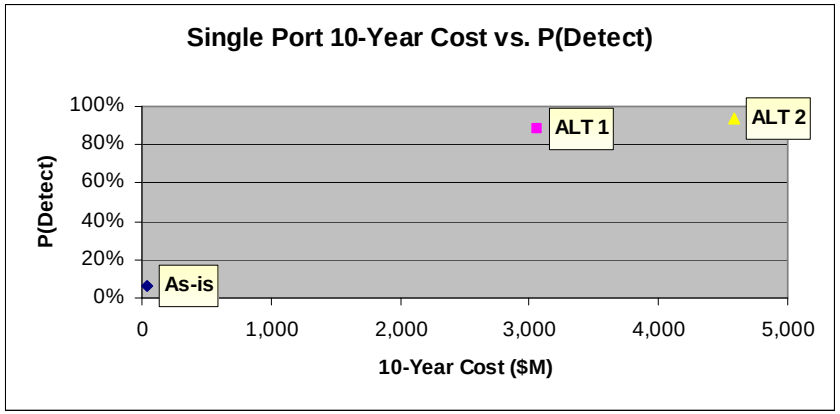

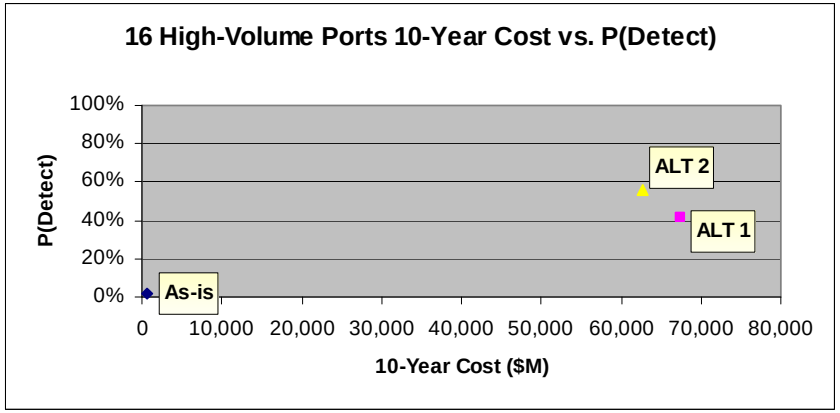

Port system performance increases with cost

CONCLUSIONS

- Current System is inadequate in defeating an attack:
  - Container Volume
  - Detection Capabilities Limited
  - Costs Associated with Delay and False Alarm
- Best performance achieved through a layered defense of ‘Port Centric’ and ‘Intelligence’ systems

CONCLUSIONS

- Passive sensor P(d) drives system
- Passive sensor P(fa) impacts delay cost
- Effective supply chain security measures can reduce delay cost
- Increase in security measures will act to deter illicit trade which may result in lower system costs

RECOMMENDATIONS

- Invest in passive sensor technologies
- Continue development of sensor technologies with penetration capabilities
- Offer incentives to industry

RECOMMENDATIONS

- Develop a method to test security measures
- More inspectors needed at domestic and international ports
- Countries would benefit from implementation of C-TPAT
- Research methods to decrease time to unload containers for inspection

Questions?

- LT William Westmoreland, USN
- LT Micah Kelley, USNR
- 1st LT Hasan Gungor, TuAF
- ENS Jared Wilhelm, USNR

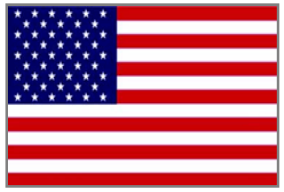

Back-Up Slides

Original Model – Port of LA

- Considers single WMD
- Simple, baseline model

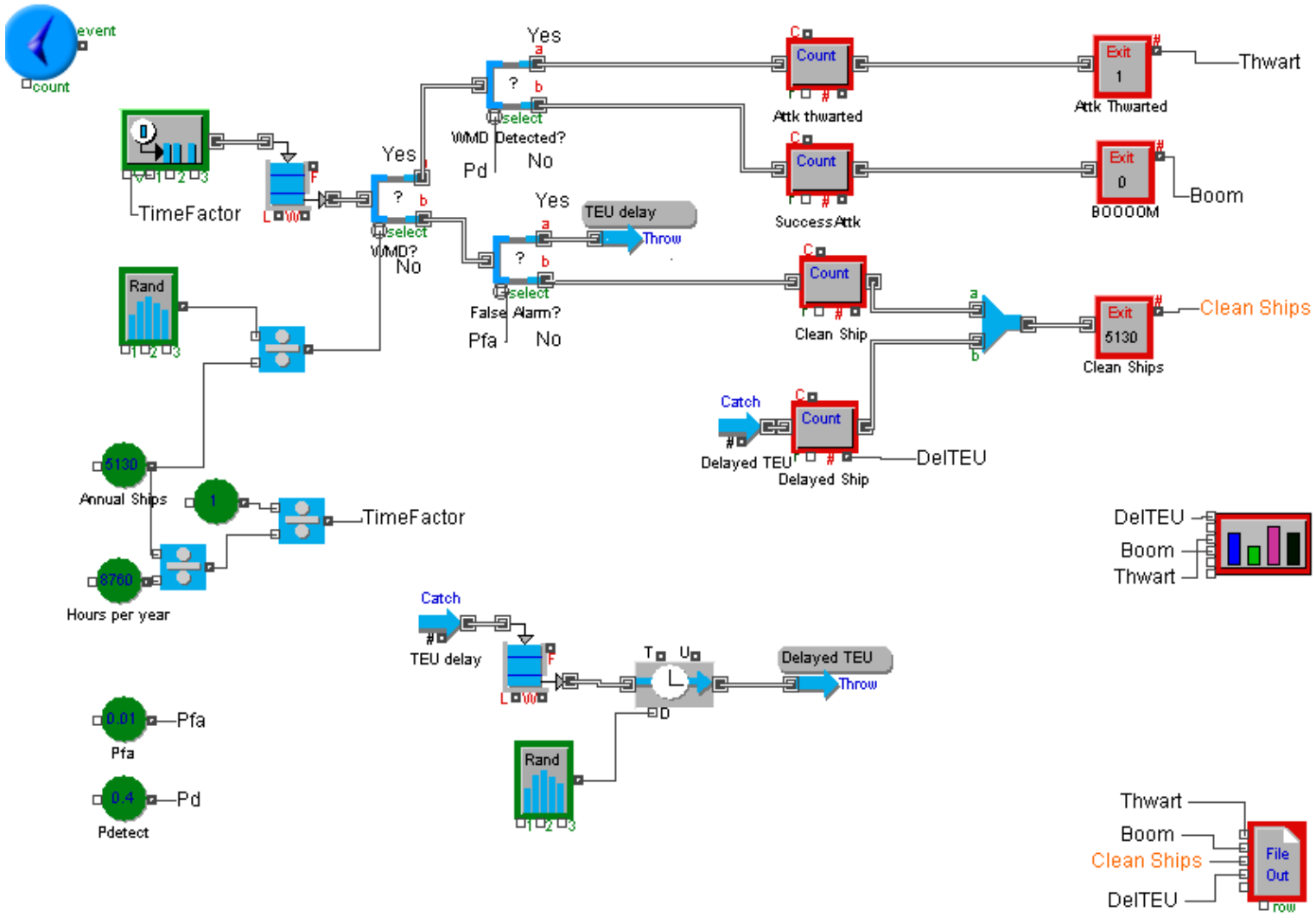

Second Generation Model – Port of LA Expanded

- **Considers Nuclear, Biological and Chemical WMD**

Third Model – Port of LA Expanded w/ Layered Sensors

- Considers Nuclear, Biological and Chemical WMD
- Adds in realistic sensing layers and alert team

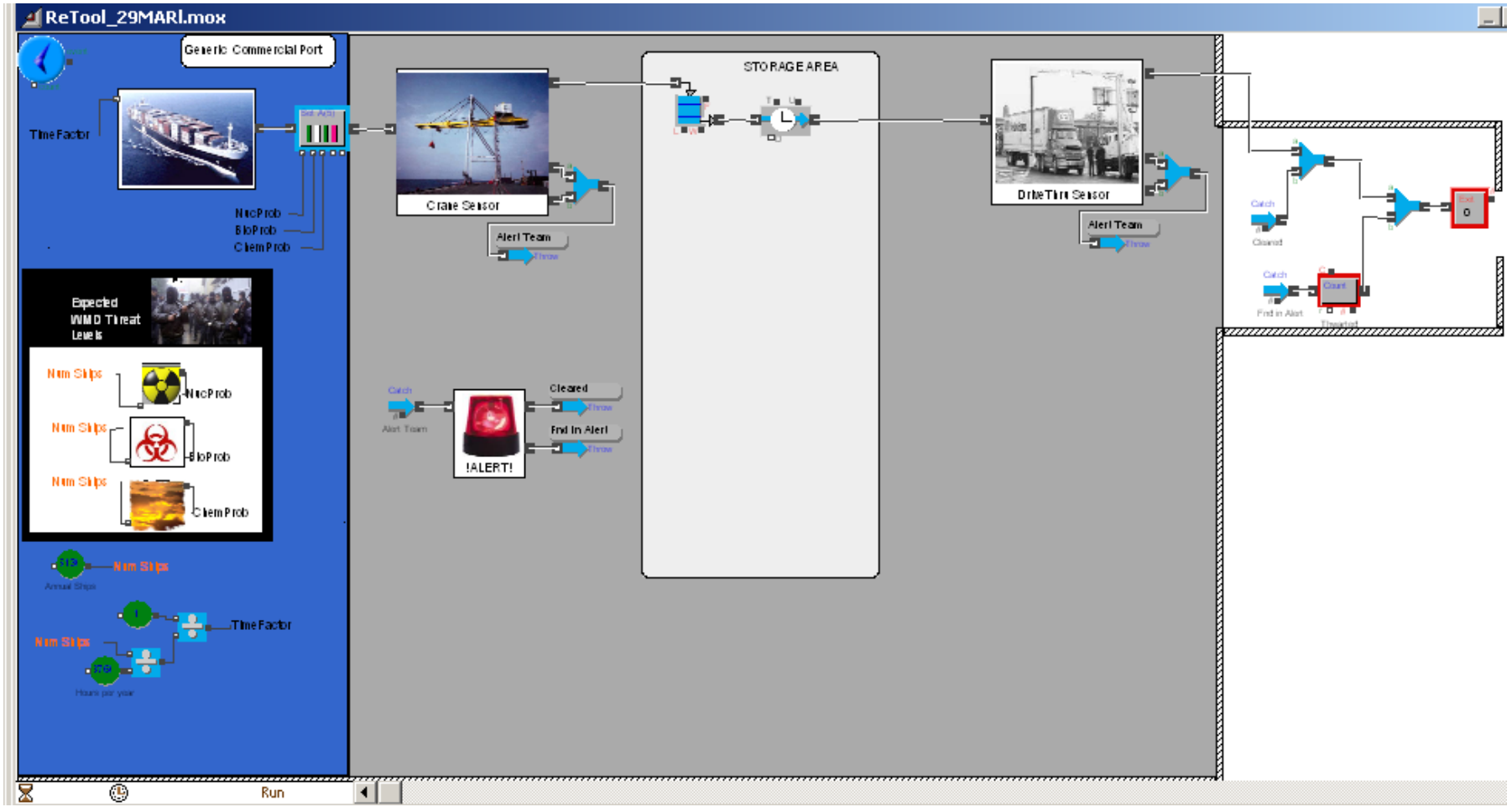

Port of Singapore “As-Is” Model

- Nuclear, Biological, Chemical and Explosive WMD capability
- Develop to represent current system as close as possible using realistic, researched numbers

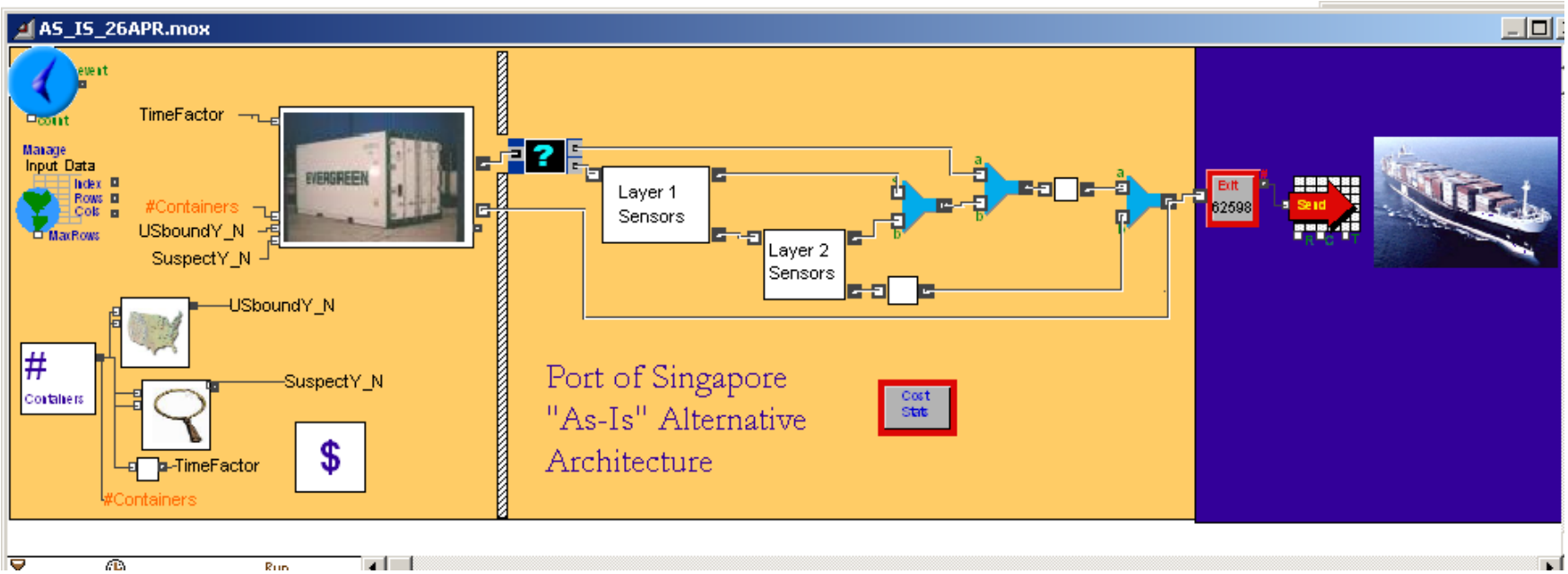

Excel Input File

Excel Output File

Alternative 1 Model

- Layered passive and active system
- Targets based on minimal intelligence… Port Centric

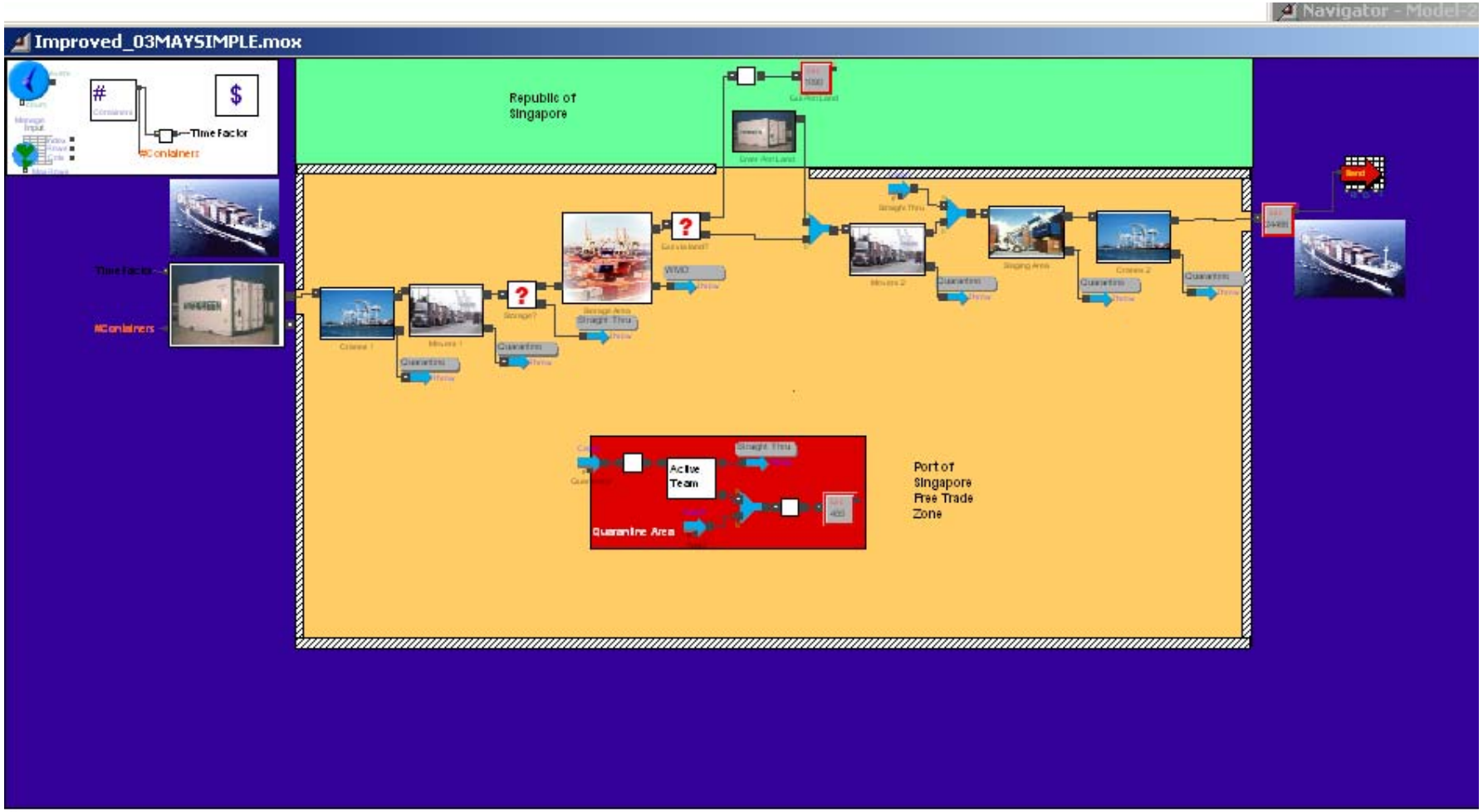

Excel Input File

Excel Output File

Alternative 2 Model

- Layered passive and active system
- Tagets based on intelligence, manifests and container seals

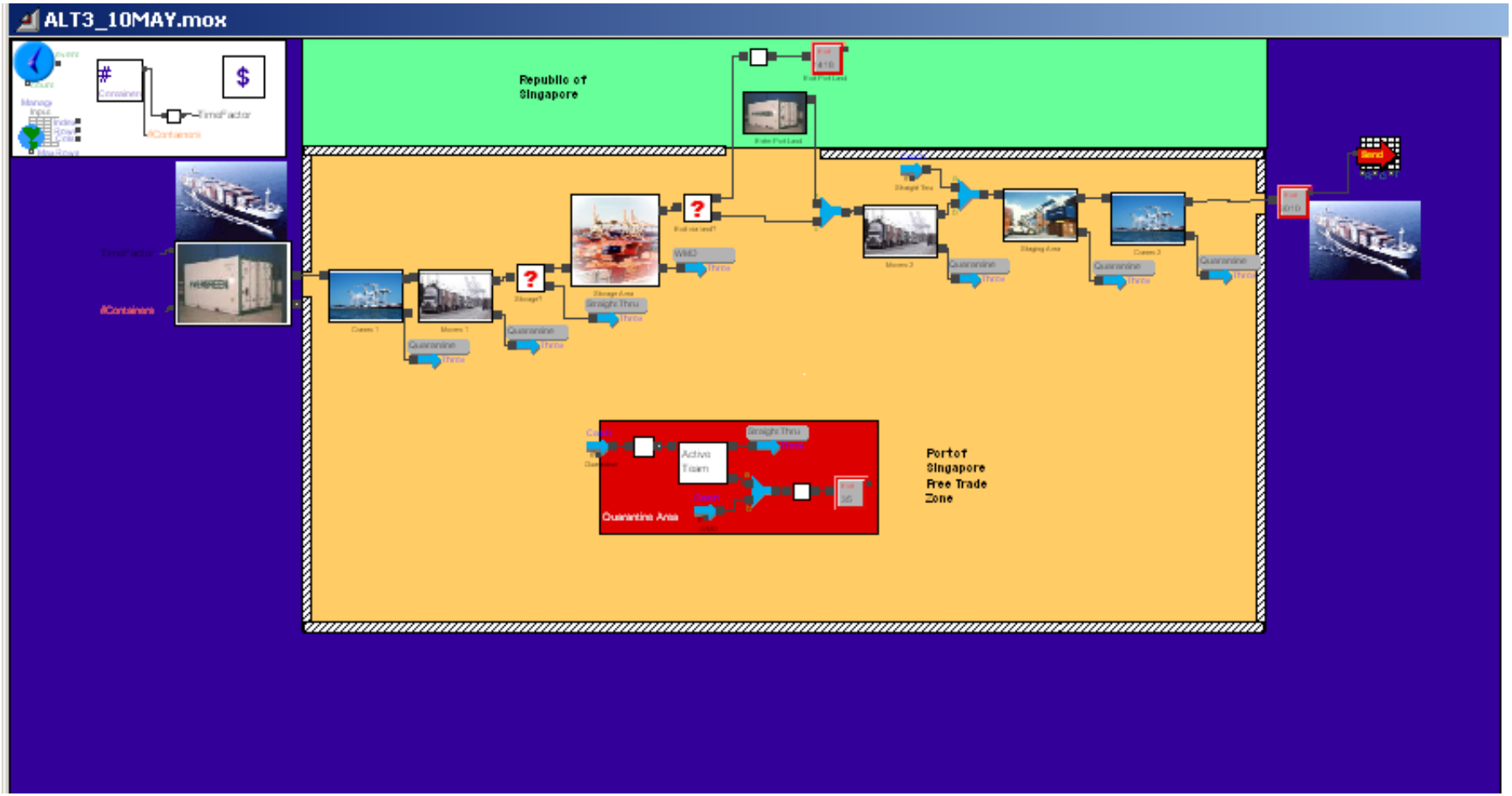

Excel Input File

Excel Output File