SHIPBOARD SYSTEM INTERFACE DEVELOPMENT

Presented at the

Naval Post Graduate School

August 12, 2004

Jeffrey O. Grady
President, JOG System Engineering, Inc.
6015 Charae Street
San Diego, CA 92122
(858) 458-0121
jgrady@ucsd.edu, Jeff@jogse.com
http://www.jogse.com

© JOG System Engineering, Inc

Who Is Jeff Grady?

CURRENT POSITION

President, JOG System Engineering, Inc.
System Engineering Assessment, Consulting, and Education Firm

PRIOR EXPERIENCE

U.S. Marines
1964 - 1965 General Precision, Librascope Div
- Customer Training Instructor, SUBROC and ASROC ASW Systems

1965 - 1982 Teledyne Ryan Aeronautical
- Field Engineer, AQM-34 Series Special Purpose Aircraft
- Project Engineer, System Engineer, Unmanned Aircraft Systems

1982 - 1984 General Dynamics Convair Division
- System Engineer, Cruise Missile, Advanced Cruise Missile

1984 - 1993 General Dynamics Space Systems Division
- Functional Engineering Chief & Manager, Systems Development
- Advanced Projects Systems Engineering

FORMAL EDUCATION

BA Math, SDSU
MS Systems Management, USC With Information Systems Certificate

INCOSE First Elected Secretary, Fellow, Founder

AUTHOR System Requirements Analysis, System Integration, System Validation and Verification, System Engineering Planning and Enterprise Identity, System Engineering Deployment

© JOG System Engineering, Inc

What is a System?

- A system is a collection of entities which interact via relations to accomplish some pre-defined purpose or function
- A system consists of entities and internal relations (interfaces)
- A system interacts with its environment via external relations (interfaces)
- External relations may be implemented in the system or the environment

© JOG System Engineering, Inc

Specialization Of Knowledge

Knowledge Grows & We Have Our Limitations

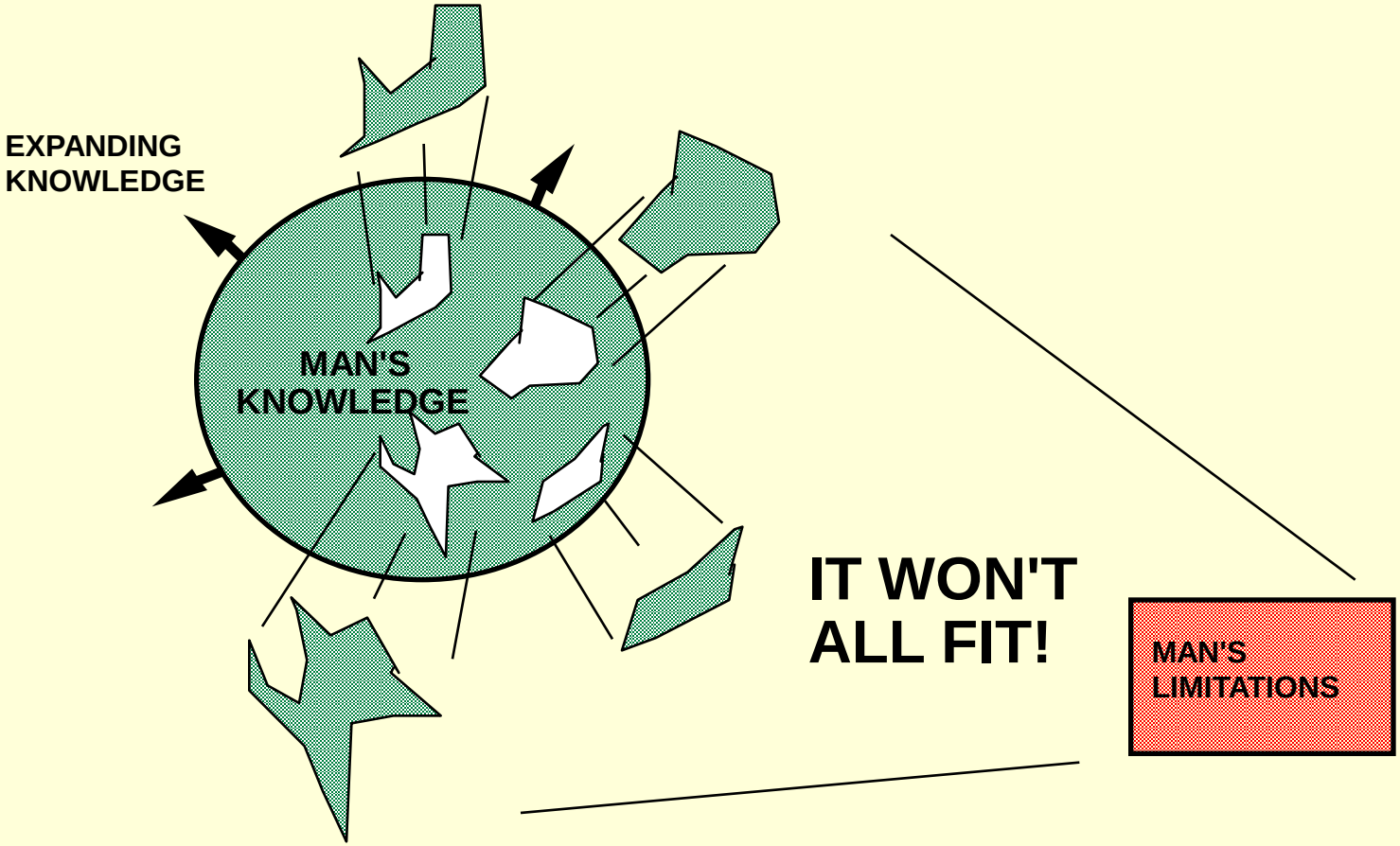

© JOG System Engineering, Inc

We Are All Specialists

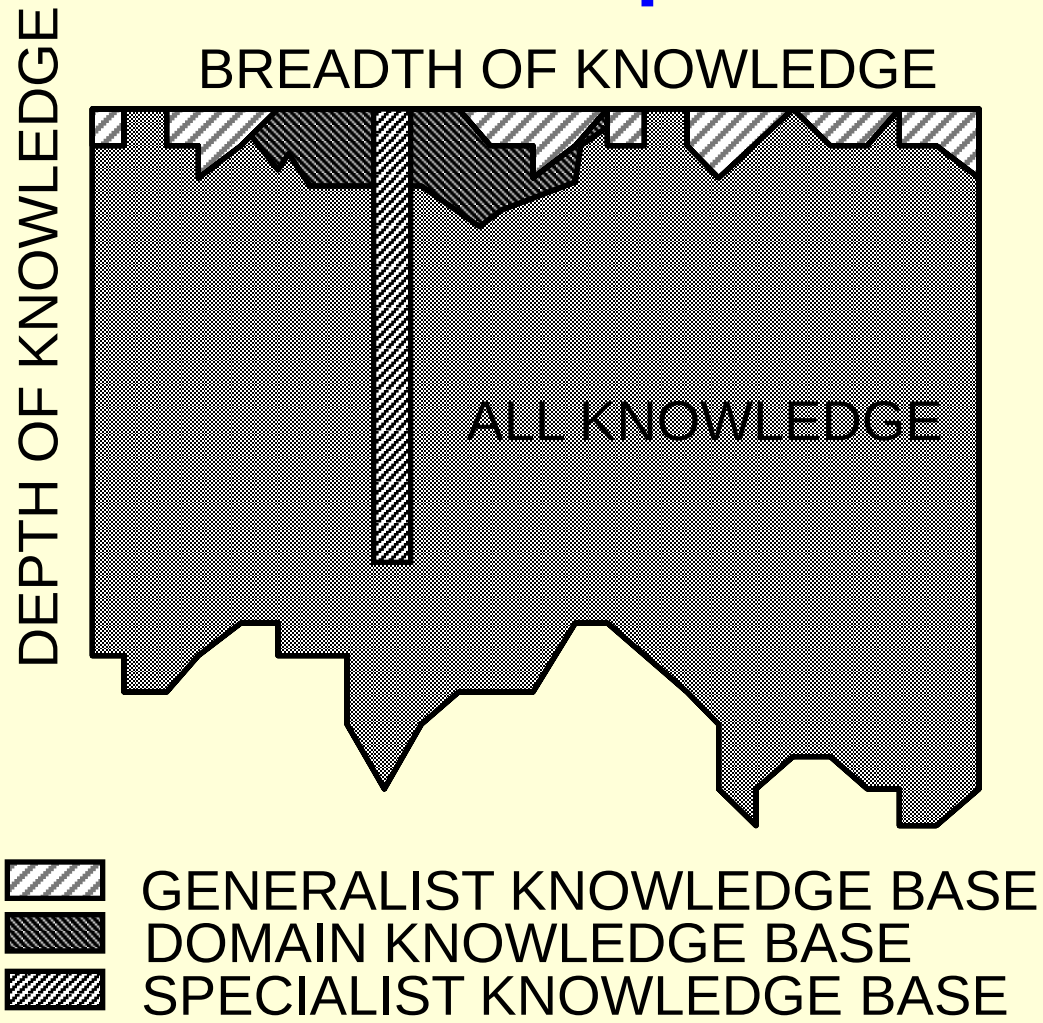

© JOG System Engineering, Inc

System Integration - What Is It?

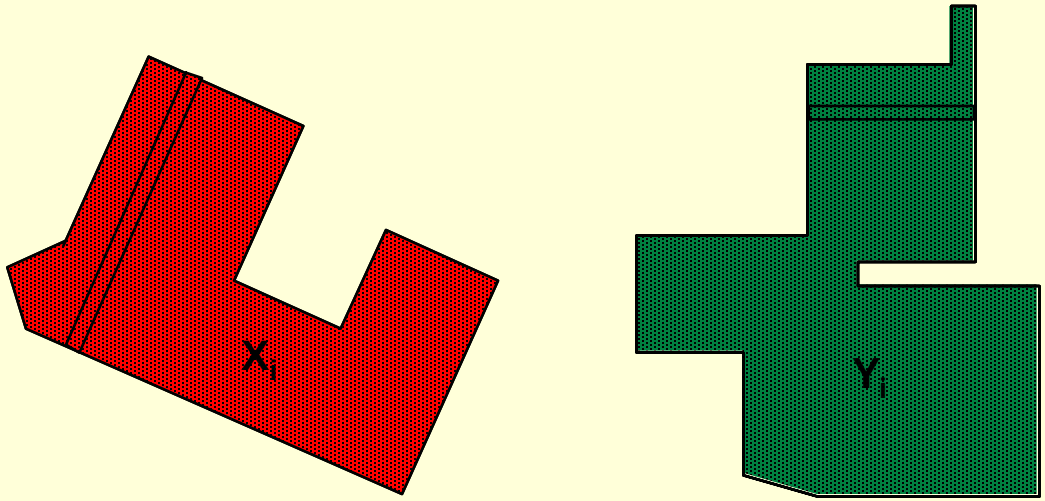

The act or process of forming, coordinating, or blending two or more elements into a functioning or unified whole. Much of this work is accomplished at interfaces

© JOG System Engineering, Inc

Integration Skills

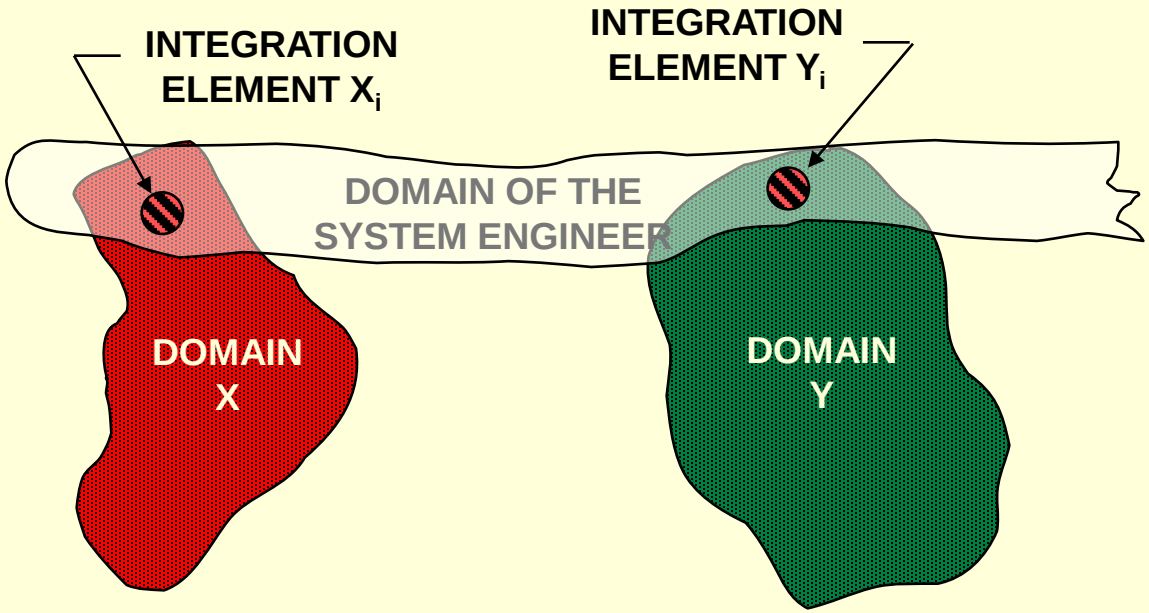

© JOG System Engineering, Inc

Integration Skills

- Domain specialists are trapped by the intensity of their focus on their domain
- A system engineer should approach his/her work from the perspective of a generalist
- Understand the domains as best you can and depend on domain people possessing proven knowledge
- Connect domain pairs that appear to be in conflict and follow the strings
- Use abstract system models that permit you to focus on what is important in any situation

© JOG System Engineering, Inc

Interface Defined

An interface is a relationship between two entities in a system or in two different systems. They are related through the mutually agreed upon media joining them.

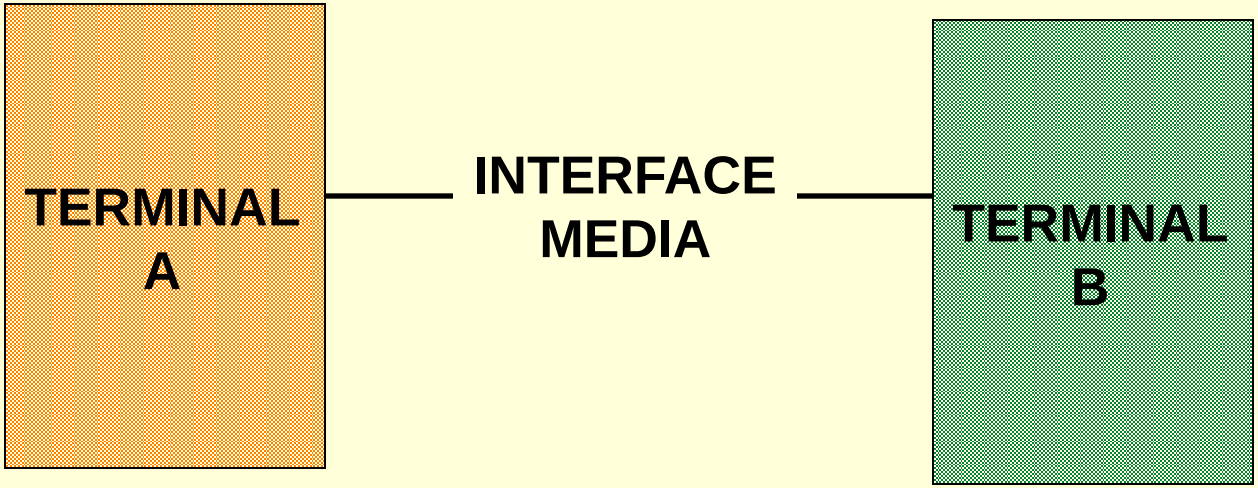

© JOG System Engineering, Inc

The System With a Null Environment

ALL SYSTEMS BUT ONE OBEY THE FUNDAMENTAL RELATION

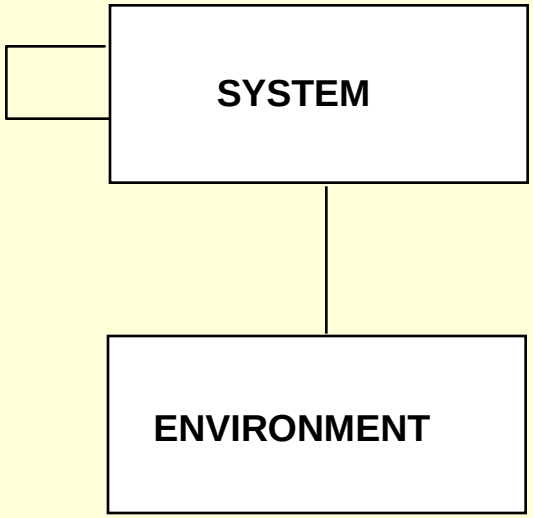

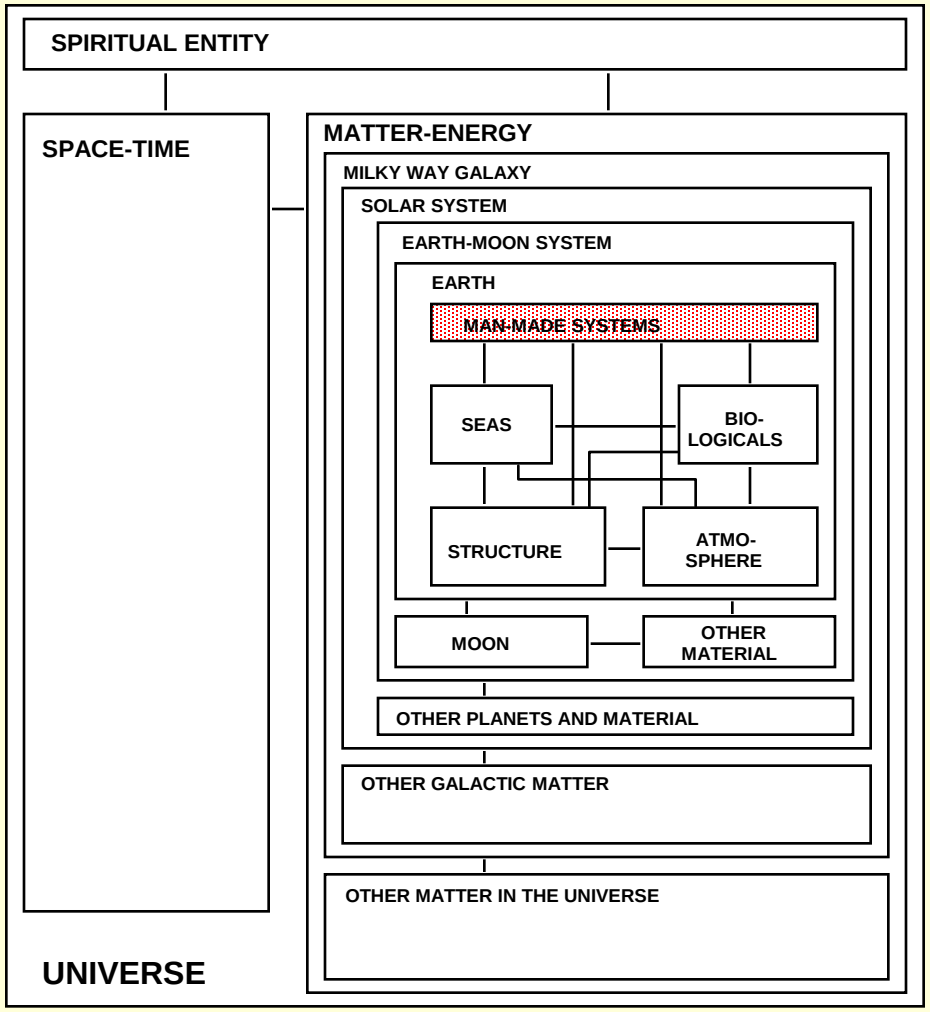

J.O. Grady 3-11-95

© JOG System Engineering, Inc

The Fundamental Problems in Interface Work

There is a one-to-one correspondence between teams and architecture entities. There is a one- to-two correspondence between interfaces and teams.

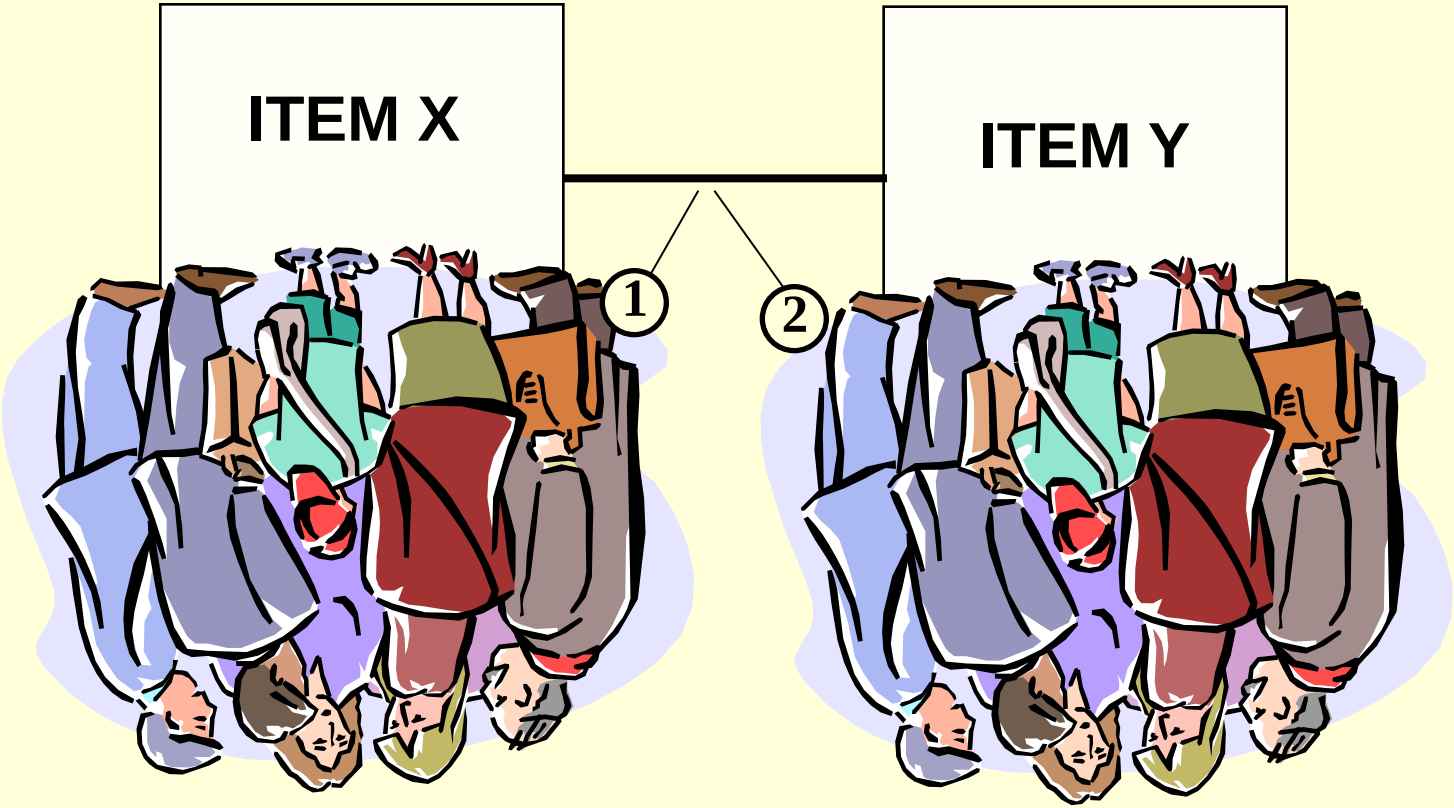

© JOG System Engineering, Inc

The Fundamental Problems in Interface Work

We tend to look inwardly

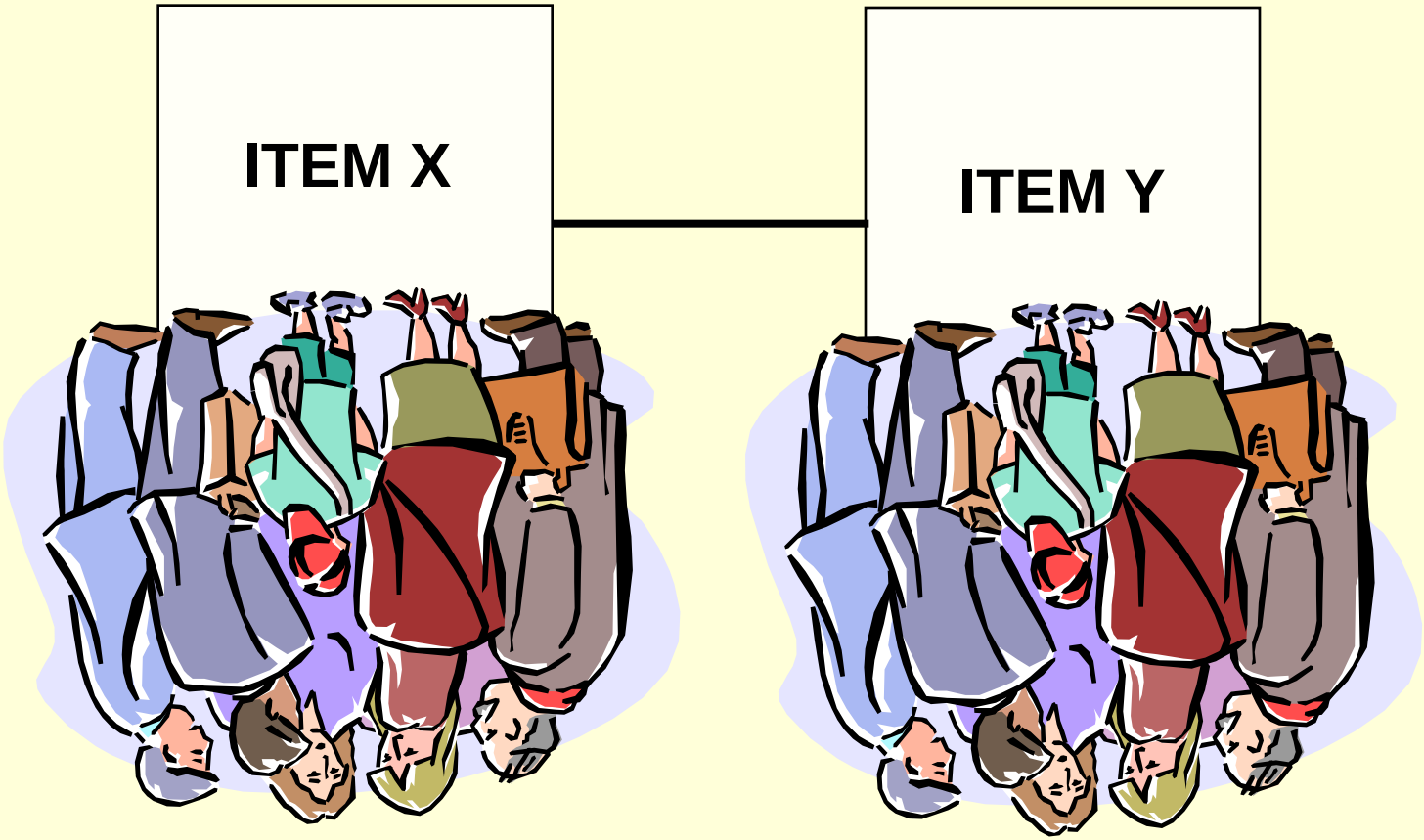

© JOG System Engineering, Inc

The Fundamental Problems in Interface Work

We are dependent on the worst interface on planet Earth in the development of interfaces.

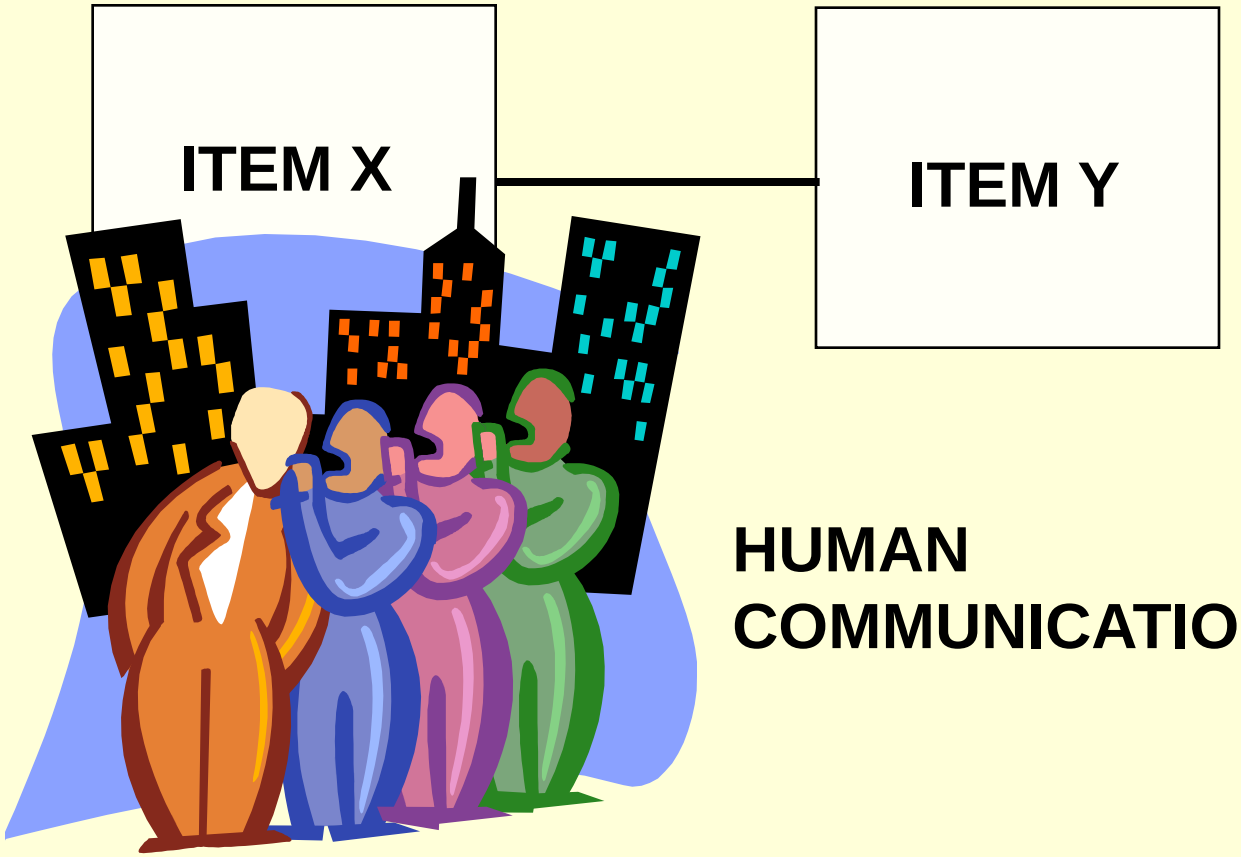

HUMAN COMMUNICATIONS!!

© JOG System Engineering, Inc

Two Interface Definition Models

SCHEMATIC BLOCK DIAGRAMMING

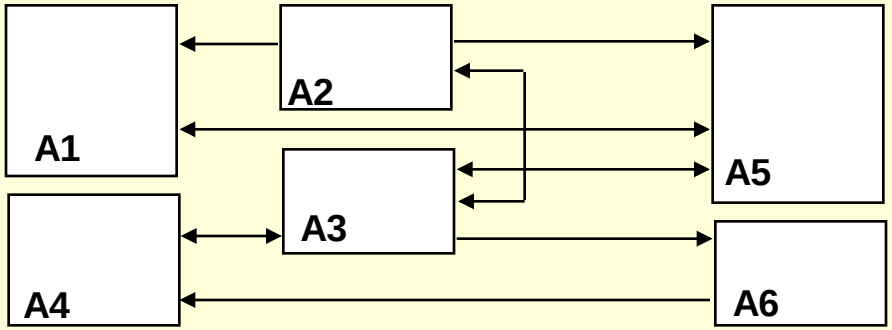

LINES DEFINE INTERFACES

BLOCKS ARE OBJECTS ONLY FROM THE ARCHITECTURE

N-SQUARE DIAGRAMMING

A1				X	
X	A2	X		X	
	X	A3	X	X	X
		X	A4		
X		X		A5	
			X		A6

MARKED INTERSECTIONS DEFINE INTERFACES

DIAGONAL BLOCKS ARE OBJECTS ONLY FROM ARCHITECTURE DIAGRAM

APPARENT AMBIGUITY ACTUALLY REFLECTS DIRECTIONALITY

© JOG System Engineering, Inc

Interface Responsibility Is a Matter of Perspective

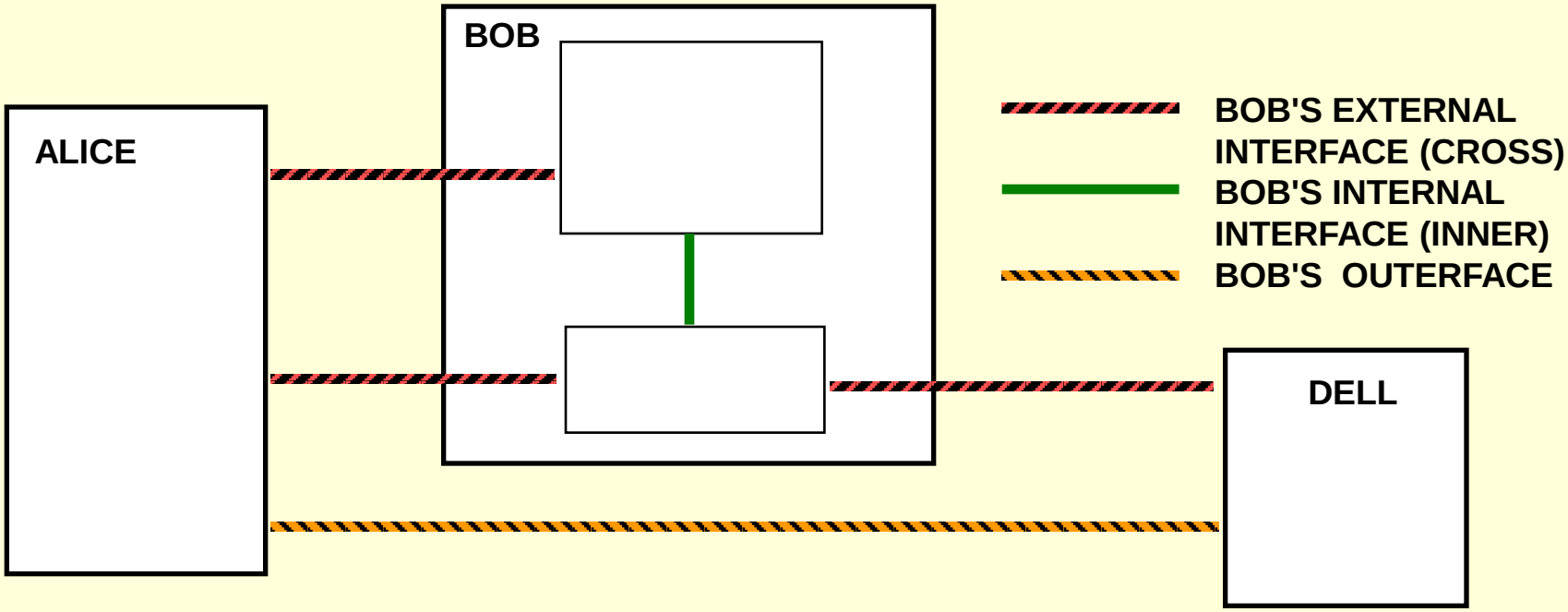

BOB MUST TAKE FULL RESPONSIBILITY FOR DEVELOPING HIS INTERNAL INTERFACE, WORK WITH ALICE AND DELL ON HIS EXTERNAL INTERFACE, AND IGNORE HIS OUTERFACE EXCEPT FOR SECONDARY INTERFACE EFFECTS (SOFTWARE EXTENDED INTERFACES AND POSSIBLE SNEAK CIRCUIT EFFECTS)

© JOG System Engineering, Inc

Team Responsibilities Using SBD Overlays

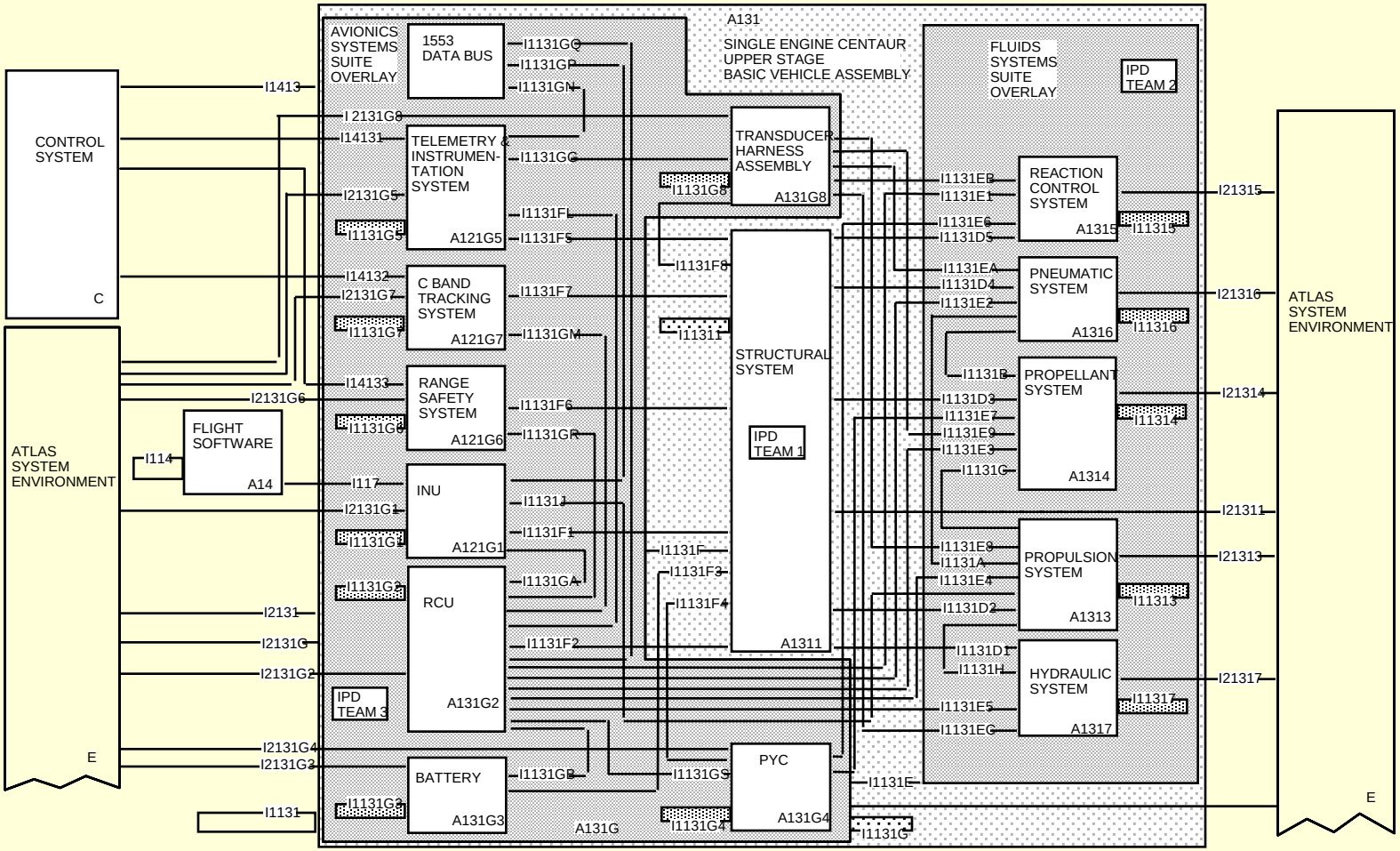

© JOG System Engineering, Inc

We Seek to Forge Crowds Into Teams

A POWERFUL UINIFYING FORCE

COMMON VISION

© JOG System Engineering, Inc

The Benefits of Product Oriented Teaming

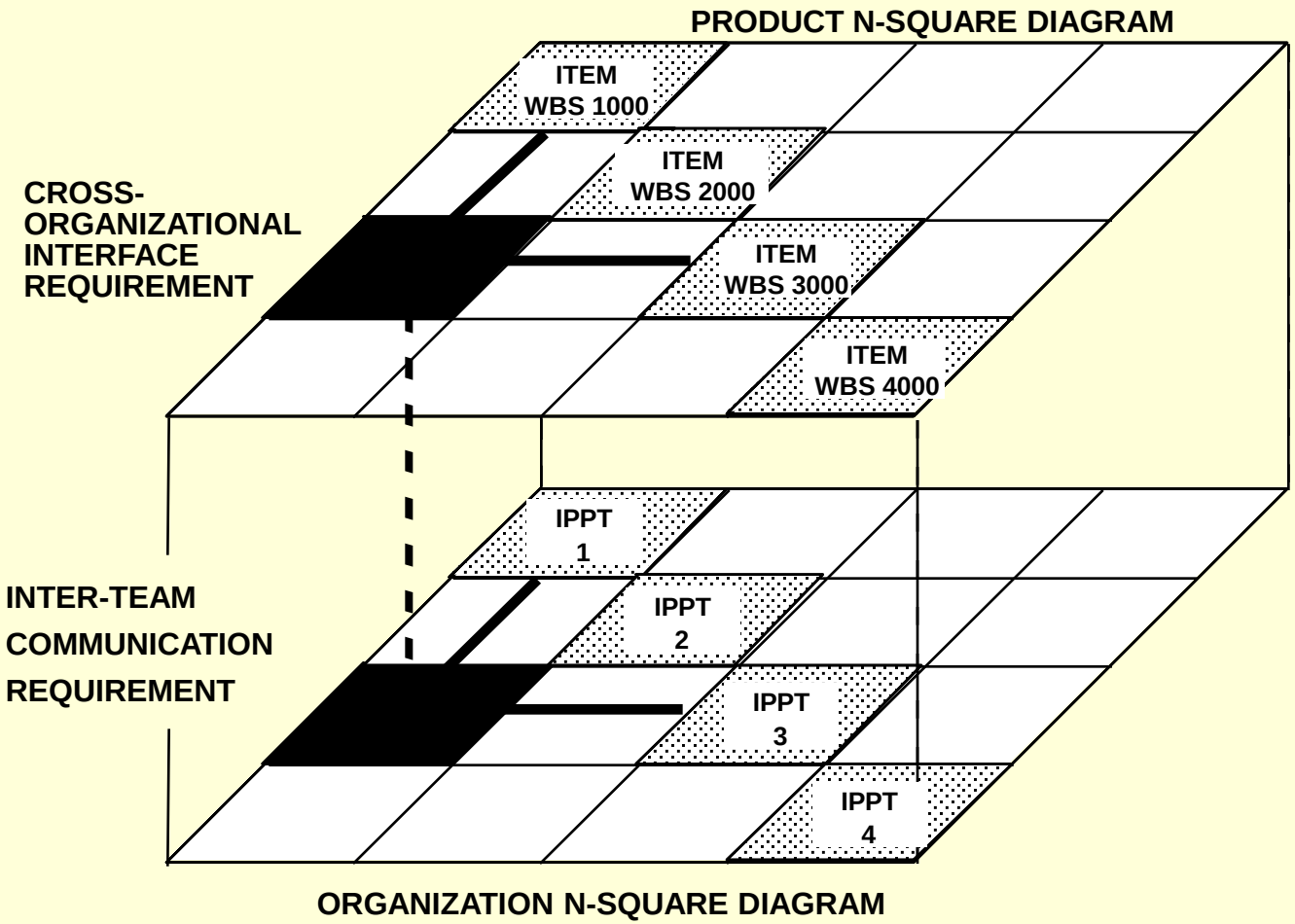

© JOG System Engineering, Inc

DD(X) Internal Inter-segment Interfaces

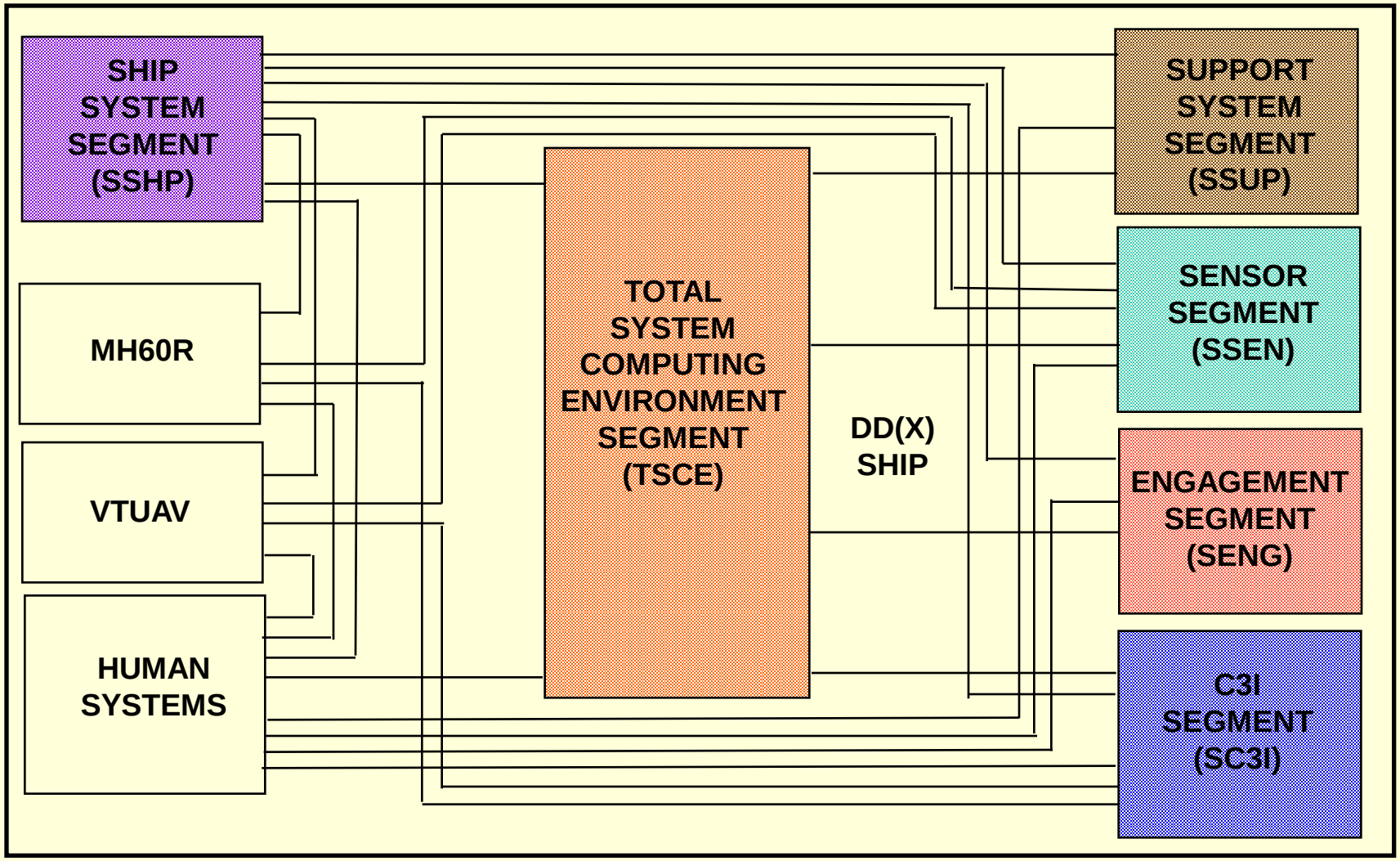

© JOG System Engineering, Inc

DD(X) Interface Terminal Categories

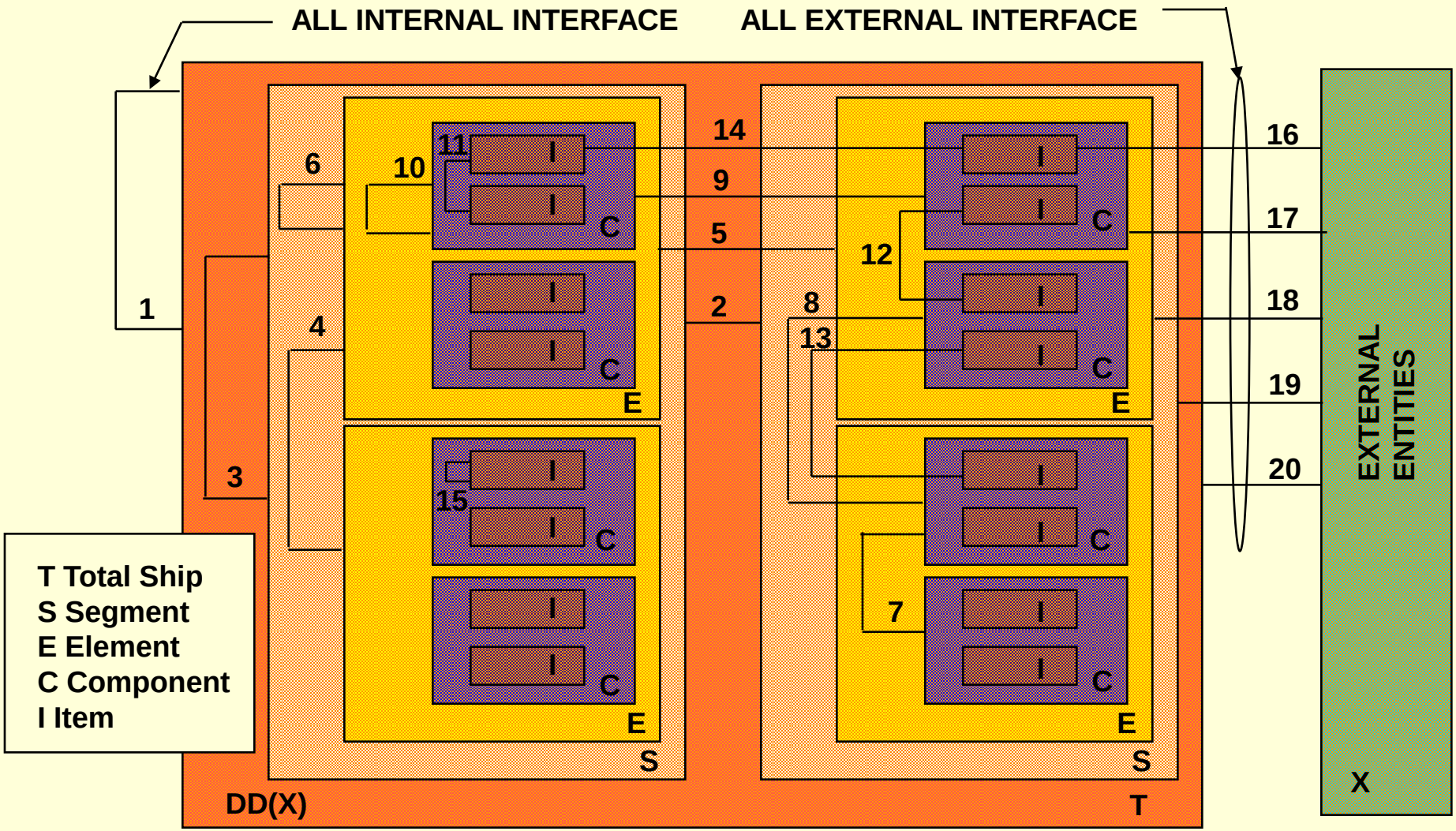

© JOG System Engineering, Inc

DD(X) Terminal Categories and Owning Entities

PHASE 3 SRR

PHASE 3 PDR

PHASE 3 CDR

INTERFACE POSSIBILITIES NBR	NAME	OWNING ENTITY
1	All DD(X) internal interface	T
2	Inter-segment	T
3	Intra segment	S
4	Inter-element, same segment	S
5	Inter-element, different segment	T
6	Intra-element	S
7	Inter-component, same element	E
8	Inter-component, different element, same segment	S
9	Inter-component, different element, different segment	T
10	Intra-component	C
11	Inter-item, same component	C
12	Inter-item, different component, same element	E
13	Inter-item, different component, different element, same segment	S
14	Inter-item, different component, different element, different segment	T
15	Intra-item	I
16	Item external	T
17	Component external	T
18	Element external	T
19	Segment external	T
20	All DD(X) external interface	T

© JOG System Engineering, Inc

Internal Example - External Communications (ExCom)

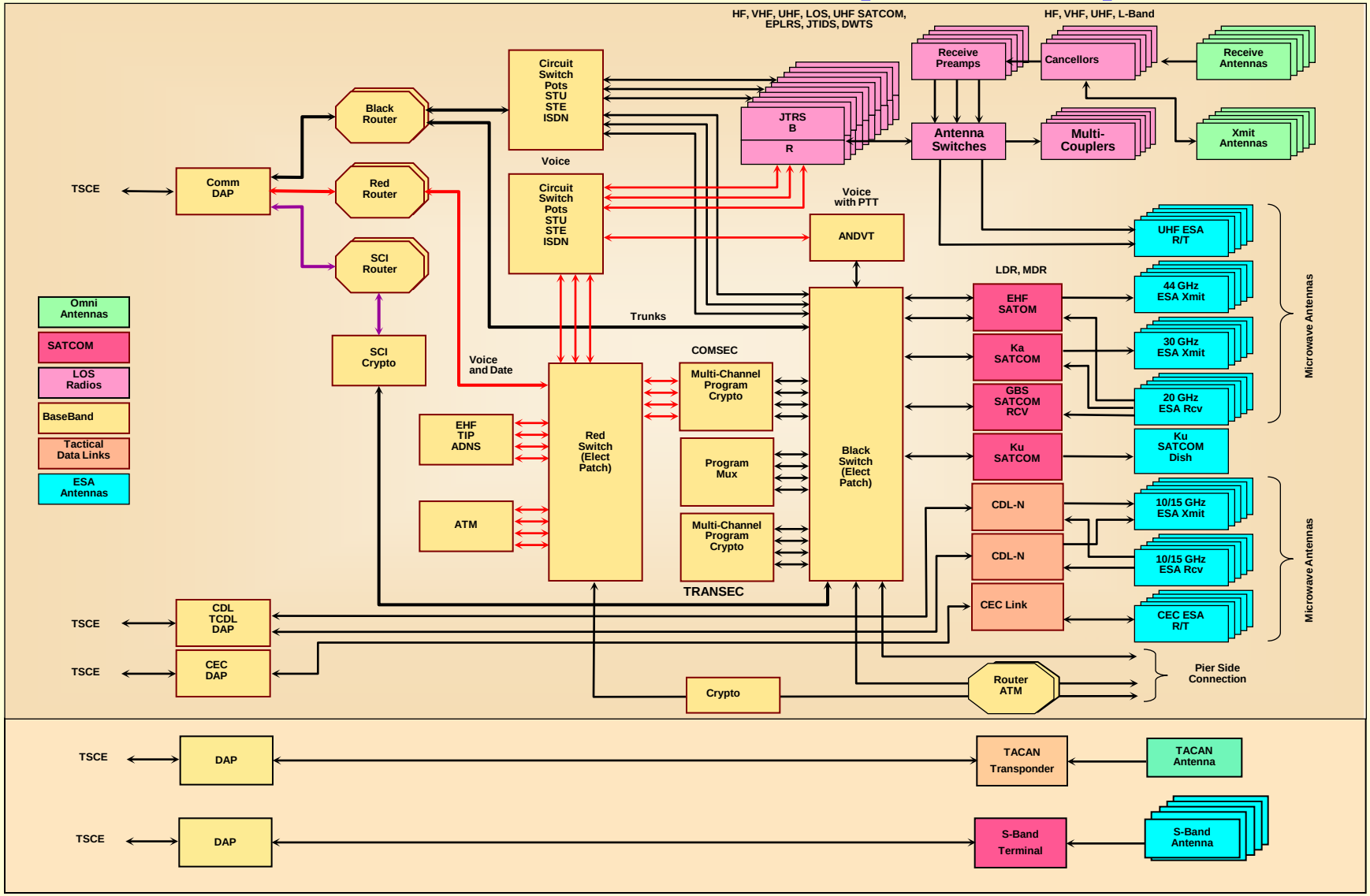

© JOG System Engineering, Inc

DD(X) as One Node for ExCom

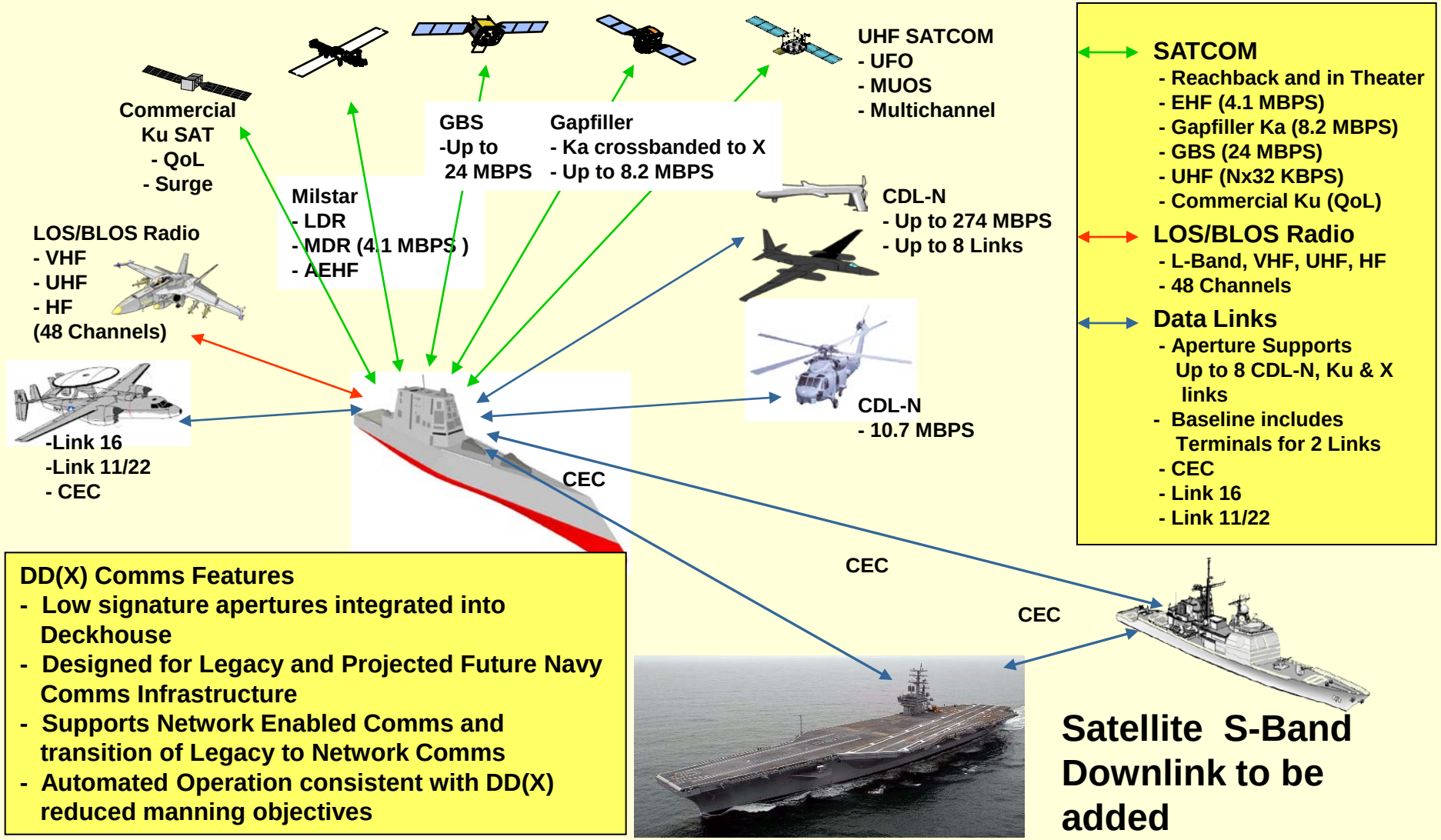

DD(X) Comms Features

- Low signature apertures integrated into Deckhouse
- Designed for Legacy and Projected Future Navy Comms Infrastructure
- Supports Network Enabled Comms and transition of Legacy to Network Comms
- Automated Operation consistent with DD(X) reduced manning objectives

Satellite S-Band Downlink to be added

© JOG System Engineering, Inc

Physical Packaging Effects

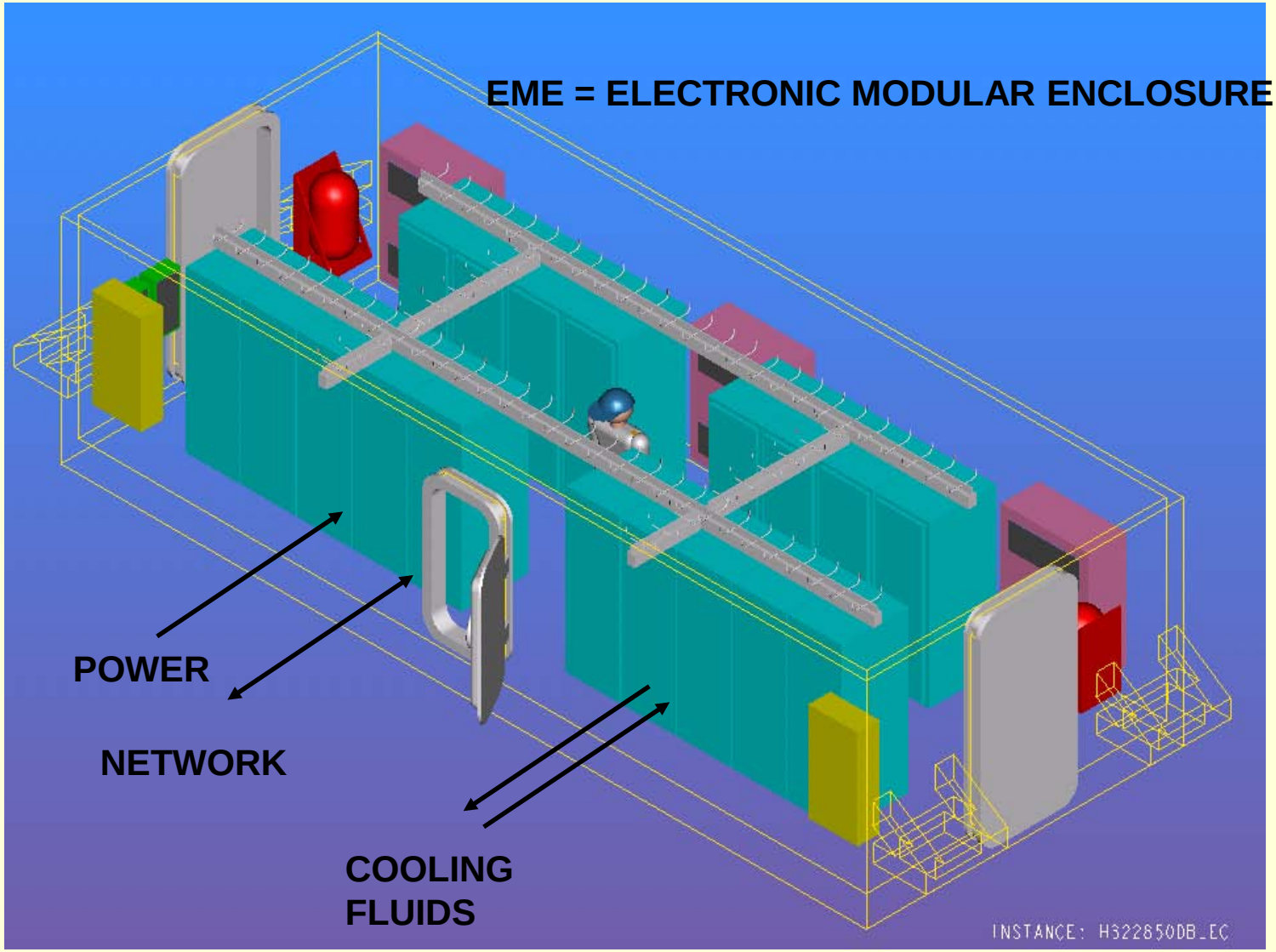

© JOG System Engineering, Inc

Enclosure Packaging Versus Segment Organization

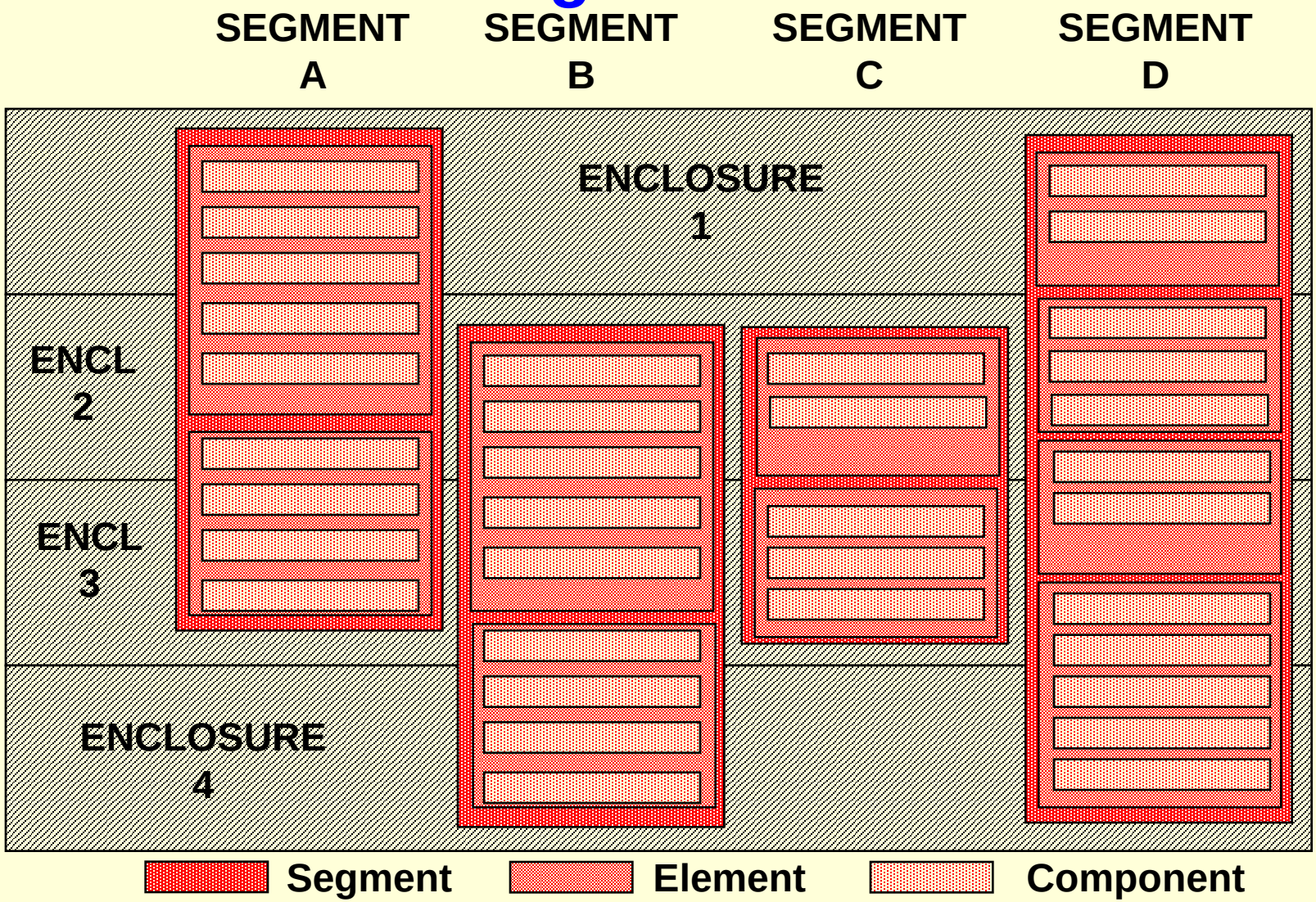

© JOG System Engineering, Inc

Interface Design Transform

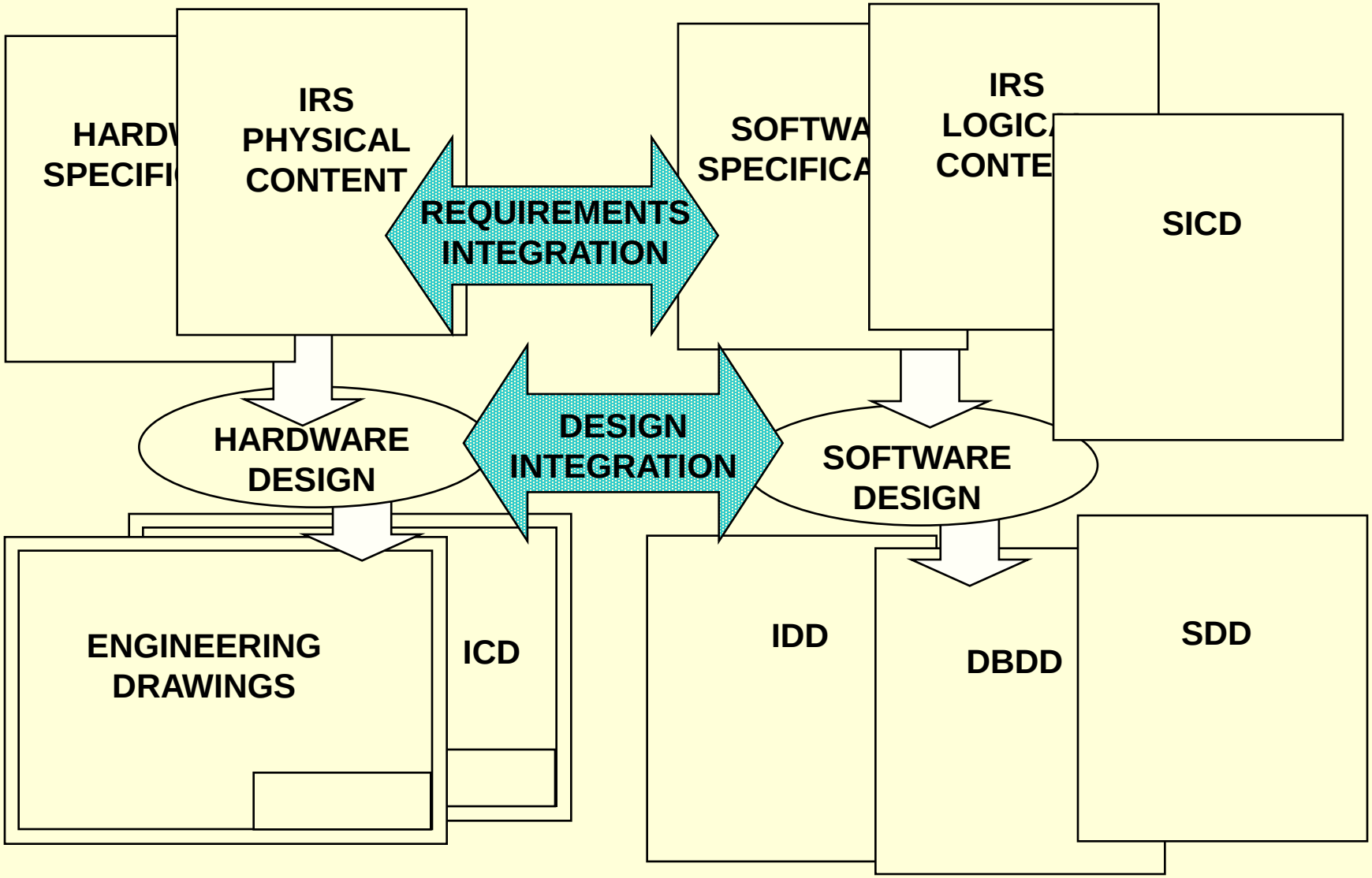

© JOG System Engineering, Inc

V Encourages Good Requirements

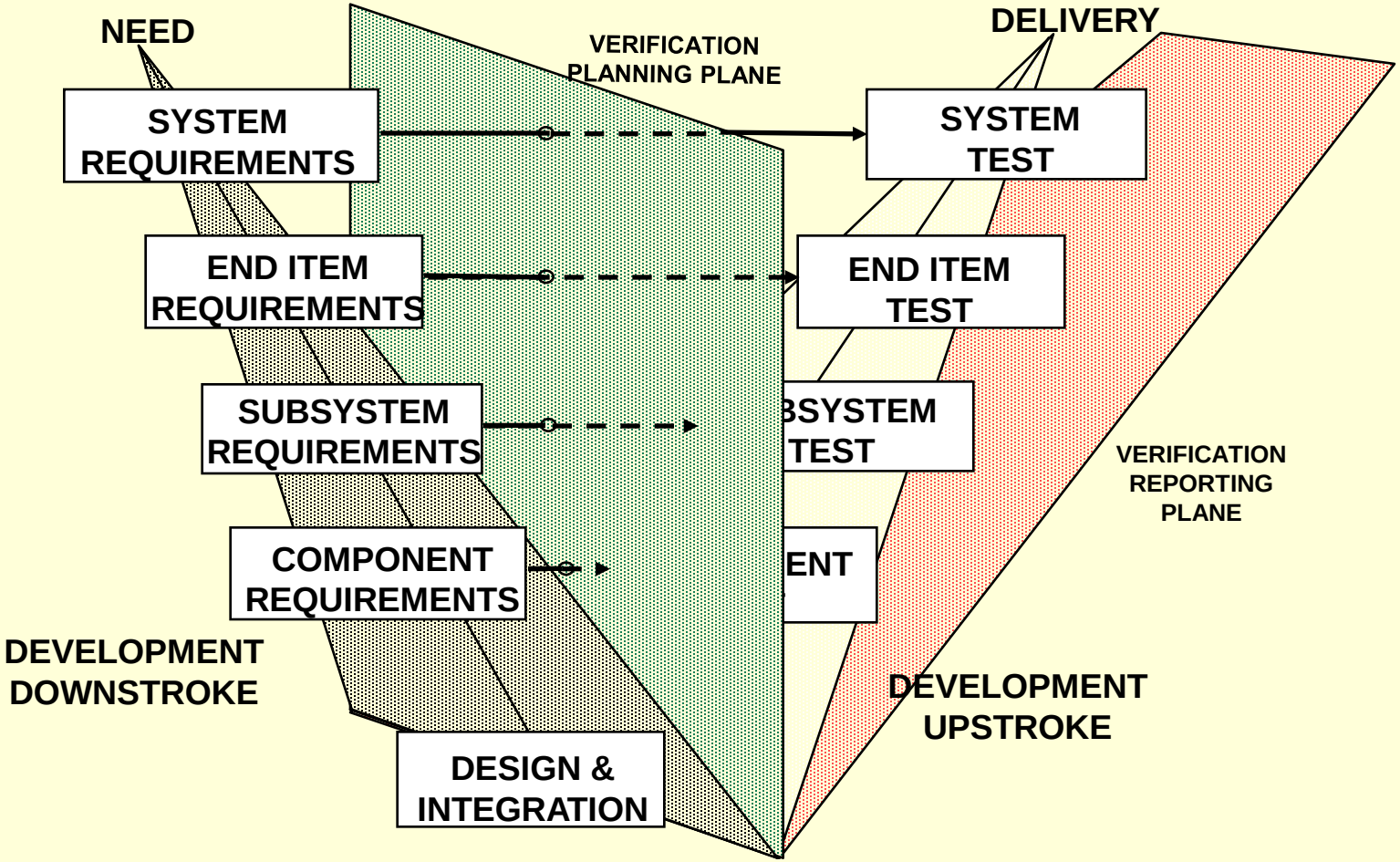

Used in conjunction with spiral development approach for DD(X)

© JOG System Engineering, Inc

Concluding Message

- System engineering is a profession with a future
- It requires an interest in the broad rather than the deep
- While system engineers do many other things, working at the most troublesome boundaries is the greatest service that they offer and most fun work that they do
- Few are the systems with more complex most troublesome boundaries than naval ships

© JOG System Engineering, Inc