Shake Table with 1- or 2-floor Active Mass Damper

The objective of Quanser's 1-floor and 2-floor Active Mass Damper experiment is to design a control system to dampen the vibrations in a building-like structure. This experiment is similar in nature to Active Mass Dampers used to suppress vibrations in tall structures to protect against earthquakes and wind. A tall building-like structure is instrumented with an accelerometer to measure the acceleration of the "roof" relative to earth. The structure is flexible along its facade. A cart driven by a rack and pinion mechanism is mounted at the top of the structure and is free to move along in the same direction as the structure.

The design is based on an observer-based state-feedback Proportional-Velocity (PV) position controller. Both experiments can be run with or without a shake table.

Equations of motion

$$G_c(s) = \frac{r_{mp}\eta_g K_g \eta_m K_t}{((R_m M_c r_{mp}^2 + R_m \eta_g K_g^2 J_m)s + \eta_g K_g^2 \eta_m K_t K_m + B_{eq} R_m r_{mp}^2)s}$$

Specifications

Maximum percentage overshoot:	$M_p < 10\%$
Time of the first peak:	$t_p = 0.15s$

Damping ratio:	$\zeta = 0.59$
Natural frequency:	$\omega_n = 26\ rad/s$

PV controller

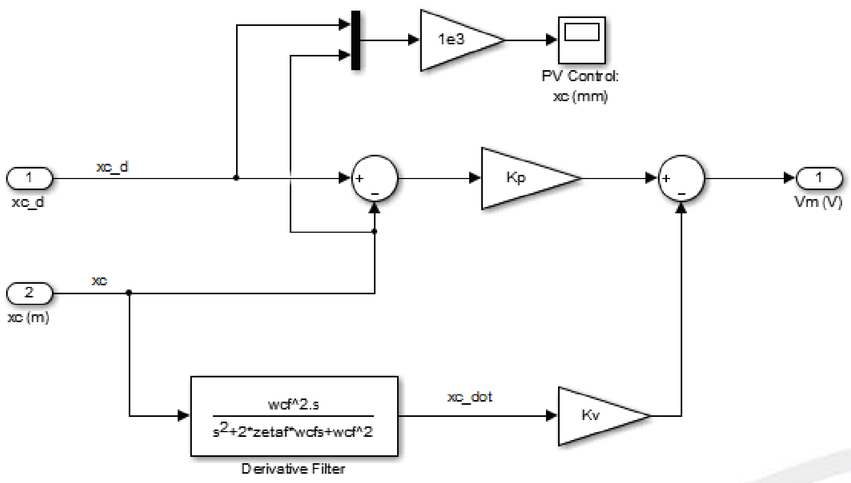

$$K_p = \frac{\omega_n^2 R_m (M_c r_{mp}^2 + \eta_g K_g^2 J_m)}{r_{mp}\eta_g K_g \eta_m K_t} = 305.9\frac{V}{m}$$

$$K_v = \frac{2\zeta\omega_n R_m (M_c r_{mp}^2 + \eta_g K_g^2 J_m) - \eta_g K_g^2 \eta_m K_t K_m - B_{eq} R_m r_{mp}^2)}{r_{mp}\eta_g K_g \eta_m K_t} = 7.7\frac{Vs}{m}$$

Wiring schematics

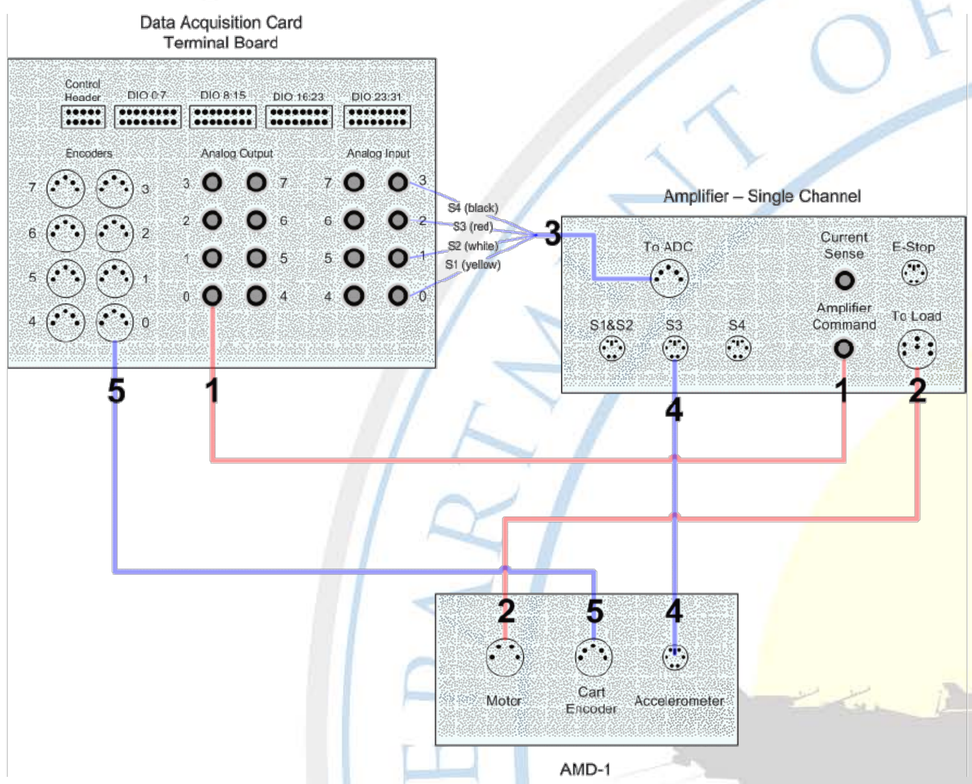

Simulink block diagram

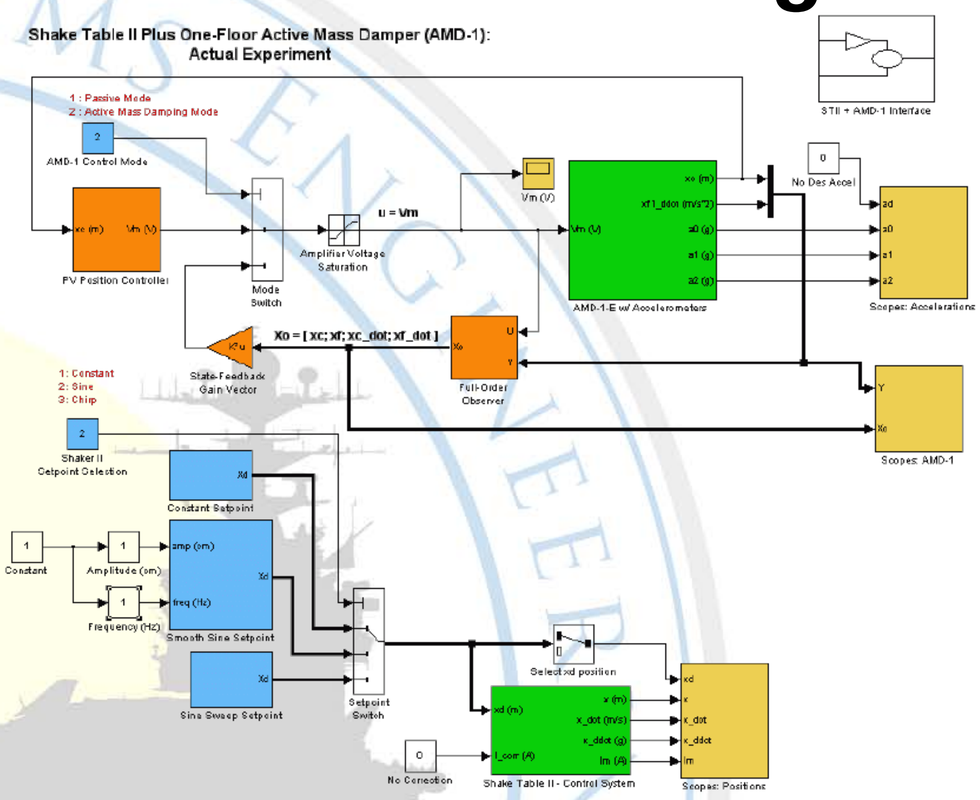

Applications

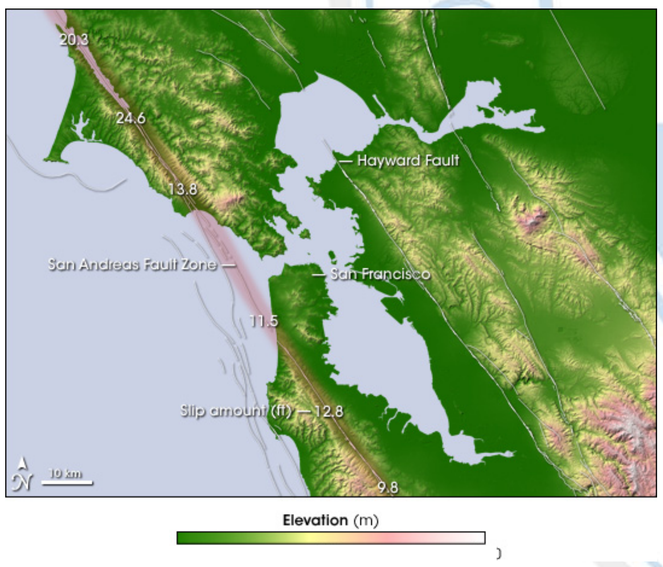

PoC: Prof. **Oleg Yakimenko**, Bu-223
oayakime@nps.edu, (831) 656-2826

NPS PRAESTANTIA PER SCIENTIAM 1909

CRUSER Consortium for Robotics and Unmanned Systems Education and Research

SYSTEMS ENGINEERING ESTABLISHED 2002