Running Solar Tracker Experiment

Contents

Purpose 1
Physical Setup 1
Procedures 2
Step 1: Starting MATLAB 2
Step 2: Running Script File to Compute Gains 2
Step 3: Wrapping Up 3
References 3

Purpose

The goal of this experiment is to design, implement and test a Proportional-Integral-Derivative (PID) controller to track the moving light source (Fig.1).

Figure 1. Solar Tracker.

Physical Setup

Prior to powering on any equipment, make sure everything is corrected as follows

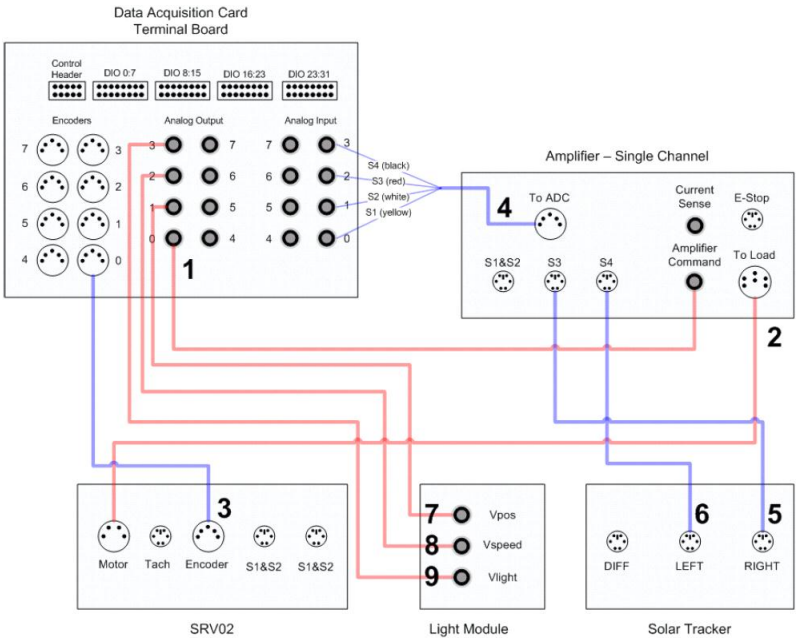

Figure 2. Solar Tracker connections for all experiments.

Procedures

Step 1: Starting MATLAB

Power on the computer and make sure the amplifier and data acquisition card are powered on as well. Open MATLAB and change the directory to the Lab Files folder under Experiment #16

Step 2: Running Script File to Compute Gains

In the 'setup_st_srv02_model.m', scroll down to Modeling type and make the following changes: MODELING_TYPE = MANUAL.

Now run the 'setup_st_srv02_model.m' script which sets the model parameters K = 1 and τ = 0.1.

(This is where the confusion came in and half the lab was skipped. We skipped that part because the light was not turning on. We assumed it was because we were doing the wrong lab, come to find out the section we skipped was the sections where we needed to calculate all the proper gains.)

Next, hit the reset button on the light tracker and wait for the light to center.

Run the setup_st_tracker.m script.

Open up the *theta_r(deg)* scope.

Set the *light Pos (deg)* slider gain to 0.

Build and compile Simulink diagram.

Then select start to begin running the controller.

Set the *Light Pos (deg)* to 30 deg, *Light Speed (deg/s)* to 60, and the *Light Brightness* to 3. The light should come on now and start moving back and forth between +30 and -30 deg and the camera should be tracking it.

Change gains until a suitable plot is acquired.

Step 3: Wrapping Up

After a suitable plot is acquired, turn off the amplifier and log off and shut down the computer.

References

[1] Quanser Inc., *Data-Acquisition Device User Manual*.
[2] Quanser Inc., *QUARC User Manual* (type `doc quarc` in MATLAB to access).
[3] Quanser Inc., *QUARC Installation Manual*.
[4] Quanser Inc., *Amplifier User Manual*.
[5] Quanser Inc., *SRV02 User Manual*, 2009.
[6] Quanser Inc., *Solar Tracker User Manual*.
[7] Quanser Inc., *SRV02 QUARC Integration*, 2008.
[8] Quanser Inc., *Rotary Experiment #1: SRV02 Modeling*.
[9] Quanser Inc., *Rotary Experiment #2: SRV02 Position Control*.